YAMAHA

F150
LF150
F200
LF200

OWNER'S MANUAL

⚠ Read this manual carefully before operating this outboard motor.

6LH-28199-73-E0

Read this manual carefully before operating this outboard motor. Keep this manual onboard in a waterproof bag when boating. This manual should stay with the outboard motor if it is sold.

EMU25108

To the owner

Thank you for selecting a Yamaha outboard motor. This Owner's Manual contains information needed for proper operation, maintenance and care. A thorough understanding of these simple instructions will help you obtain maximum enjoyment from your new Yamaha. If you have any question about the operation or maintenance of your outboard motor, please consult a Yamaha dealer.

In this Owner's Manual particularly important information is distinguished in the following ways.

⚠ : This is the safety alert symbol. It is used to alert you to potential personal injury hazards. Obey all safety messages that follow this symbol to avoid possible injury or death.

EWM00782

⚠ WARNING

A WARNING indicates a hazardous situation which, if not avoided, could result in death or serious injury.

ECM00702

NOTICE

A NOTICE indicates special precautions that must be taken to avoid damage to the outboard motor or other property.

TIP:

A TIP provides key information to make procedures easier or clearer.

Yamaha continually seeks advancements in product design and quality. Therefore, while this manual contains the most current product information available at the time of printing, there may be minor discrepancies between your machine and this manual. If there is any question concerning this manual, please consult your Yamaha dealer.

To ensure long product life, Yamaha recommends that you use the product and perform the specified periodic inspections and maintenance by correctly following the instructions in the owner's manual. Any damage resulting from neglect of these instructions is not covered by warranty.

Some countries have laws or regulations restricting users from taking the product out of the country where it was purchased, and it may be impossible to register the product in the destination country. Additionally, the warranty may not apply in certain regions. When planning to take the product to another country, consult the dealer where the product was purchased for further information.

If the product was purchased used, please consult your closest dealer for customer re-registration, and to be eligible for the specified services.

TIP:

The F150SA, LF150SA, F200SA, LF200SA and the standard accessories are used as a base for the explanations and illustrations in this manual. Therefore some items may not apply to every model.

EMU25123

F150, LF150, F200, LF200
OWNER'S MANUAL
©2026 by Yamaha Motor Co., Ltd.
1st Edition, October 2025
All rights reserved.
Any reprinting or unauthorized use without the written permission of Yamaha Motor Co., Ltd. is expressly prohibited.
Printed in Japan

Table of contents

Safety information 1
Outboard motor safety 1
Propeller 1
Rotating parts 1
Hot parts 1
Electric shock 1
Power trim and tilt 1
Engine shut-off cord (lanyard) 1
Gasoline 2
Gasoline exposure and spills 2
Carbon monoxide 2
Modifications 2
Boating safety 2
Alcohol and drugs 2
Personal flotation devices (PFDs) 2
People in the water 2
Passengers 2
Overloading 3
Avoid collisions 3
Collisions with floating or submerged objects 3
Weather 4
Passenger training 4
Boating safety publications 4
Laws and regulations 4

General information 5
Identification numbers record 5
Outboard motor serial number 5
Key number 5
EC Declaration of Conformity (DoC) 5
CE Marking / UKCA Marking 6
Compliance mark label 6
Read manuals and labels 8
Warning labels 8
Use of your data 11

Specifications and requirements 14
Specifications 14
Installation requirements 15
Boat horsepower rating 15
Mounting outboard motor 15
Digital electronic control requirements 16
Battery requirements 16
Battery specifications 16
Propeller selection 17
Counter rotation models 17
Start-in-gear protection 18
Engine oil requirements 18
Electro hydraulic steering fluid requirements 18
Fuel requirements 19
Gasoline 19
Muddy or acidic water 19
Anti-fouling paint 19
Outboard motor disposal requirements 20
Emergency equipment 20
Emission control information 20
Star labels 20

Components 23
Components diagram 23
Optional items 25
Helm Master™ EX (upgradable) 27
Digital electronic control 28
Control lever 29
Power trim and tilt switches 30
DEC alert indicator 30
Speed control switch 31
Neutral hold switch 31
Single lever switch 32
Trim Assist switch 32
Electronic Key Switch (EKS) 33
Electronic Key Switch panel 33
Key fob 33
Engine shut-off cord (lanyard) and clip 34
6X6 switch 35
Yamaha Security System (Y-COP/ Optional) 35
Main switch 35
Start/Stop switch panel 36

Table of contents

All Start/Stop switch panel (optional) 36
Engine shut-off cord (lanyard) and clip 36
Outboard motor equipment 37
Power trim and tilt switch on bottom cowling 37
Trim tab with anode 38
Tilt support lever for power trim and tilt model 38
Cowling lock lever 39
Flushing device 39
Fuel filter 40

Instruments and indicators 41
CL5 Display 41
6Y8 Multifunction meters 43

Engine control system 47
Alert system 47
Digital electronic control alert 47
Overheat alert 47
Low oil pressure alert 49
Water separator alert 50

Installation 52
Installation 52
Mounting the outboard motor 52

Operation 54
First-time operation 54
Filling engine oil 54
Breaking in engine 54
Getting to know your boat 54
Checks before starting engine 55
Fuel level 55
Removing top cowling 55
Fuel system 55
Controls 56
Engine shut-off cord (lanyard) 56
Engine oil 57
Outboard motor 57
Flushing device 57
Installing top cowling 58
Power trim and tilt system 59
Battery 60
Filling fuel 60
Operating engine 60
Sending fuel 60
Starting engine 61
Checks after starting engine 66
Cooling water 66
Warming up engine 67
Procedure for warming up engine 67
Checks after engine warm up 67
Shifting 67
Stop switches 67
Shifting 68
Neutral hold switch operation 68
Single lever switch operation 69
Stopping boat 70
Stopping engine 70
Procedure for stopping engine 70
Trimming outboard motor 74
Adjusting trim angle (Power trim and tilt) 74
Adjusting boat trim 75
Tilting up and down 76
Procedure for tilting up (power trim and tilt models) 76
Procedure for tilting down 77
PTT TotalTilt™ 78
Shallow water 80
Cruising in shallow water 80
Cruising in other conditions 81

Maintenance 83
Transporting and storing outboard motor 83
Storing outboard motor 83
Procedure 84
Lubrication 85
Flushing cooling water passage 85
Cleaning the outboard motor 86
Checking painted surface of outboard motor 86
Periodic maintenance 86

Table of contents

Replacement parts 87
Severe operating conditions.....87
Maintenance chart 1.....88
Maintenance chart 2.....91
Greasing 92
Inspecting spark plug.....94
Inspecting engine idle speed.....95
Changing engine oil.....95
Replacing the engine oil filter 100
Why Yamalube 101
Inspecting wiring and connectors ...101
Inspecting propeller.....102
Removing propeller 102
Installing propeller 103
Changing gear oil 103
Inspecting and replacing anode(s) ...105
Checking battery (for electric start models).....105
Connecting the battery.....106
Disconnecting the battery 107
Storing the battery.....108

Trouble Recovery 109
Troubleshooting 109
Temporary action in emergency...112
Impact damage.....112
Running single engine (twin engines).....112
Replacing fuse.....112
Power trim and tilt will not operate ...113
Electro-Hydraulic Steering system will not operate.....114
Water separator-alert is activated after leaving port 114
Treatment of submerged motor ...116

INDEX 117

EMU33623

Outboard motor safety

Observe these precautions at all times.

EMU36502

Propeller

People can be injured or killed if they come in contact with the propeller. The propeller can keep moving even when the motor is in neutral, and sharp edges of the propeller can cut even when stationary.

- Stop the engine when a person is in the water near you.
- Keep people out of reach of the propeller, even when the engine is off.

EMU40272

Rotating parts

Hands, feet, hair, jewelry, clothing, personal flotation device (PFD) straps, etc., can become entangled with internal rotating parts of the engine, resulting in serious injury or death.

Keep the top cowling in place whenever possible. Do not remove or replace the top cowling with the engine running.

Only operate the engine with the top cowling removed according to the specific instructions in the manual. Keep hands, feet, hair, jewelry, clothing, PFD straps, etc., away from any exposed moving parts.

EMU33641

Hot parts

During and after operation, engine parts are hot enough to cause burns. Avoid touching any parts under the top cowling until the engine has cooled.

EMU33651

Electric shock

Do not touch any electrical parts while starting or operating the engine. They can cause shock or electrocution.

EMU33662

Power trim and tilt

Body parts can be crushed between the motor and the clamp bracket when the motor is trimmed or tilted. Keep body parts out of this area at all times. Be sure no one is in this area before operating the power trim and tilt mechanism.

The power trim and tilt switches operate even when the main switch is off. Keep people away from the switches whenever working around the motor.

Never get under the lower unit while it is tilted, even when the tilt support lever is locked. Severe injury could occur if the outboard motor accidentally falls.

EMU33672

Engine shut-off cord (lanyard)

Attach the engine shut-off cord so that the engine stops if the operator falls overboard or leaves the helm. This prevents the boat from running away under power and leaving people stranded, or running over people or objects.

Always attach the engine shut-off cord to a secure place on your clothing or your arm or leg while operating. Do not remove it to leave the helm while the boat is moving. Do not attach the cord to clothing that could tear loose, or route the cord where it could become entangled, preventing it from functioning.

Do not route the cord where it is likely to be accidentally pulled out. If the cord is pulled during operation, the engine will shut off and

you will lose most steering control. The boat could slow rapidly, throwing people and objects forward.

EMU33811

Gasoline

Gasoline and its vapors are highly flammable and explosive. Always, refuel according to the procedure on page 60 to reduce the risk of fire and explosion.

EMU33821

Gasoline exposure and spills

Take care not to spill gasoline. If gasoline spills, wipe it up immediately with dry rags. Dispose of rags properly.

If any gasoline spills onto your skin, immediately wash with soap and water. Change clothing if gasoline spills on it.

If you swallow gasoline, inhale a lot of gasoline vapor, or get gasoline in your eyes, get immediate medical attention. Never siphon fuel by mouth.

EMU33901

Carbon monoxide

This product emits exhaust gases which contain carbon monoxide, a colorless, odorless gas which may cause brain damage or death when inhaled. Symptoms include nausea, dizziness, and drowsiness. Keep cockpit and cabin areas well ventilated. Avoid blocking exhaust outlets.

EMU33781

Modifications

Do not attempt to modify this outboard motor. Modifications to your outboard motor may reduce safety and reliability, and render the outboard unsafe or illegal to use.

EMU33742

Boating safety

This section includes a few of the many important safety precautions that you should follow when boating.

EMU33711

Alcohol and drugs

Never operate after drinking alcohol or taking drugs. Intoxication is one of the most common factors contributing to boating fatalities.

EMU40281

Personal flotation devices (PFDs)

Have an approved PFD on board for every occupant. Yamaha recommends that you must wear a PFD whenever boating. At a minimum, children and non-swimmers should always wear PFDs, and everyone should wear PFDs when there are potentially hazardous boating conditions.

EMU33732

People in the water

Always watch carefully for people in the water, such as swimmers, skiers, or divers, whenever the engine is running. When someone is in the water near the boat, shift into neutral and stop the engine.

Stay away from swimming areas. Swimmers can be hard to see.

The propeller can keep moving even when the motor is in neutral. Stop the engine when a person is in the water near you.

EMU33752

Passengers

Consult your boat manufacturer's instructions for details about appropriate passenger locations in your boat and be sure all passengers are positioned properly before accelerating and when operating above an

idle speed. Standing or sitting in non-designated locations may result in being thrown either overboard or within the boat due to waves, wakes, or sudden changes in speed or direction. Even when people are positioned properly, alert your passengers if you must make any unusual maneuver. Always avoid jumping waves or wakes.

EMU33763

Overloading

Do not overload the boat. Consult the boat capacity plate or boat manufacturer for maximum weight and number of passengers. Be sure that weight is properly distributed according to the boat manufacturer's instructions. Overloading or incorrect weight distribution can compromise the boat's handling and lead to an accident, capsizing or swamping.

EMU33773

Avoid collisions

Scan constantly for people, objects, and other boats. Be alert for conditions that limit your visibility or block your vision of others.

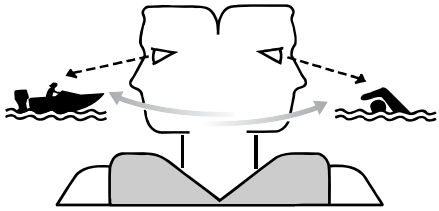

ZMU06025

Operate defensively at safe speeds and keep a safe distance away from people, objects, and other boats.

- Do not follow directly behind other boats or waterskiers.
- Avoid sharp turns or other maneuvers that make it hard for others to avoid you or understand where you are going.
- Avoid areas with submerged objects or shallow water.
- Ride within your limits and avoid aggressive maneuvers to reduce the risk of loss of control, ejection, and collision.
- Take early action to avoid collisions. Remember, boats do not have brakes, and stopping the engine or reducing throttle can reduce the ability to steer. If you are not sure that you can stop in time before hitting an obstacle, apply throttle and turn in another direction.

EMU48100

Collisions with floating or submerged objects

If the outboard motor hits a floating object or an obstacle in the water while cruising, the following could occur:

- The passengers and any loose equipment or luggage could be thrown forward due to the sudden deceleration.
- Parts of the outboard motor could come loose as a result of the impact and could be thrown into the boat.
- The boat or outboard motor could be damaged as a result of the impact.

When you operate the boat in an area where there might be floating objects or obstacles in the water, be sure to adjust the trim angle of the outboard motor, slow down, and operate carefully. For further information, see page 80.

If the outboard motor hits a floating object or an obstacle in the water, make sure that there are no abnormalities with the boat and the outboard motor. If anything abnormal is found, return to the nearest harbor at low

speed and have a Yamaha dealer inspect the outboard motor.

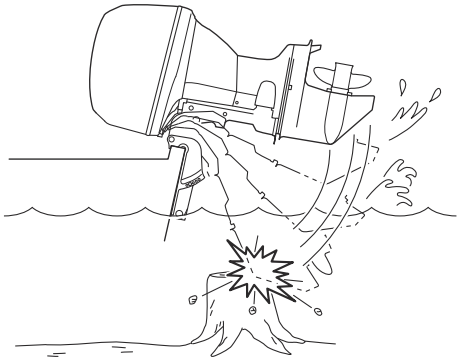

EMU33791

Weather

Stay informed about the weather. Check weather forecasts before boating. Avoid boating in hazardous weather.

EMU33881

Passenger training

Make sure at least one other passenger is trained to operate the boat in the event of an emergency.

EMU33891

Boating safety publications

Be informed about boating safety. Additional publications and information can be obtained from many boating organizations.

EMU33602

Laws and regulations

Know the marine laws and regulations where you will be boating—and obey them. Several sets of rules prevail according to geographic location, but all are basically the same as the International Rules of the Road.

EMU25172

Identification numbers record

EMU25186

Outboard motor serial number

The outboard motor serial number is stamped on the label attached to the port side of the clamp bracket.

Record your outboard motor serial number in the spaces provided to assist you in ordering spare parts from your Yamaha dealer or for reference in case your outboard motor is stolen.

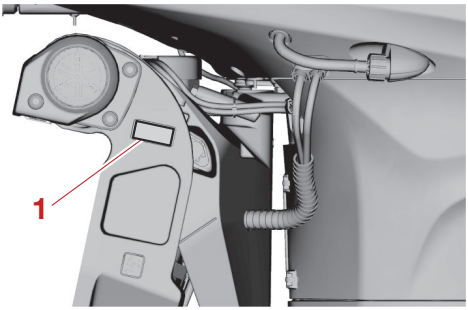

1. Outboard motor serial number location

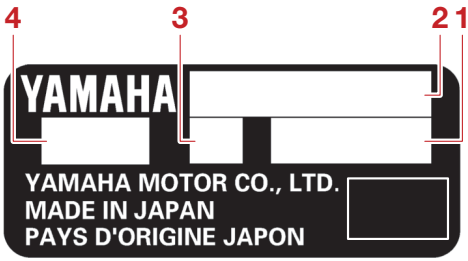

1. Serial number
2. Model name
3. Motor transom height
4. Engine code

EMU41572

Key number

The key identification number is stamped on the spare key as shown in the illustration. Keep the spare key in a safe place and record this number in the space provided for reference in case that you need a new key.

ZMU01693

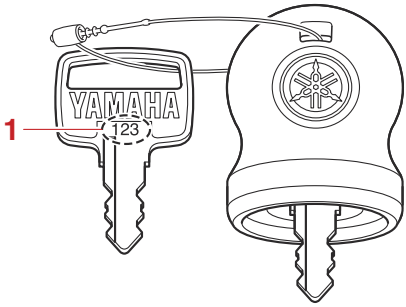

1. Key number

EMU38984

EC Declaration of Conformity (DoC)

This declaration is included with outboard motors that conform to European regulations.

This outboard motor conforms to certain portions of the European Parliament directive relating to machinery.

Each conformed outboard motor accompanied with EC DoC. EC DoC contains the following information;

- Manufacturer
- Model name
- Engine code
- Applied directives

EMU48442

CE Marking / UKCA Marking

This label is affixed to outboard motors that conform to European regulations.

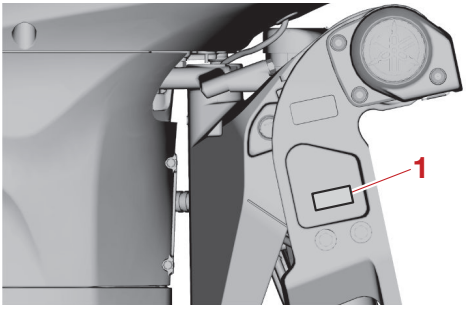

1. CE marking location

CE marking

Outboard motors affixed with this “CE” marking conform with the directives of; 2006/42/EC, 2014/30/EU, and 2013/53/EU.

UKCA marking

This product is in compliance with the Recreational Craft Regulations 2017, Electromagnetic Compatibility Regulations 2016 and Supply of Machinery (Safety) Regulations 2008.

EMU46133

Compliance mark label

Engines affixed with this label conform to the regulations for each country.

This label is affixed to the clamp bracket or swivel bracket.

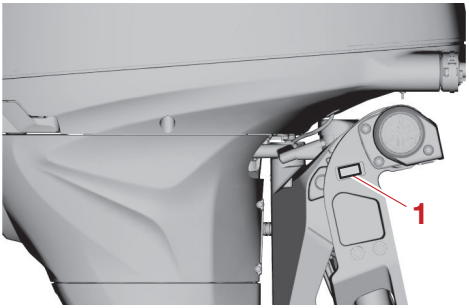

1. Compliance mark label location

Regulatory Compliance Mark (RCM)

Engines affixed with this mark conform to certain portion(s) of the Australian Radio Communications Act.

1. Regulatory Compliance Mark (RCM)

ICES-002 Compliance Label

Engines affixed with this mark meet all requirements of the Canadian Interference Causing Equipment Regulations.

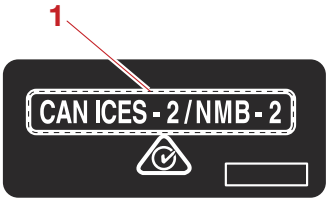

1. ICES-002 Compliance Label

EMU33524

Read manuals and labels

Before operating or working on this outboard motor:

- Read this manual.
- Read any manuals supplied with the boat.
- Read all labels on the outboard motor and the boat.

If you need any additional information, contact your Yamaha dealer.

EMU33836

Warning labels

If these labels are damaged or missing, contact your Yamaha dealer for replacements.

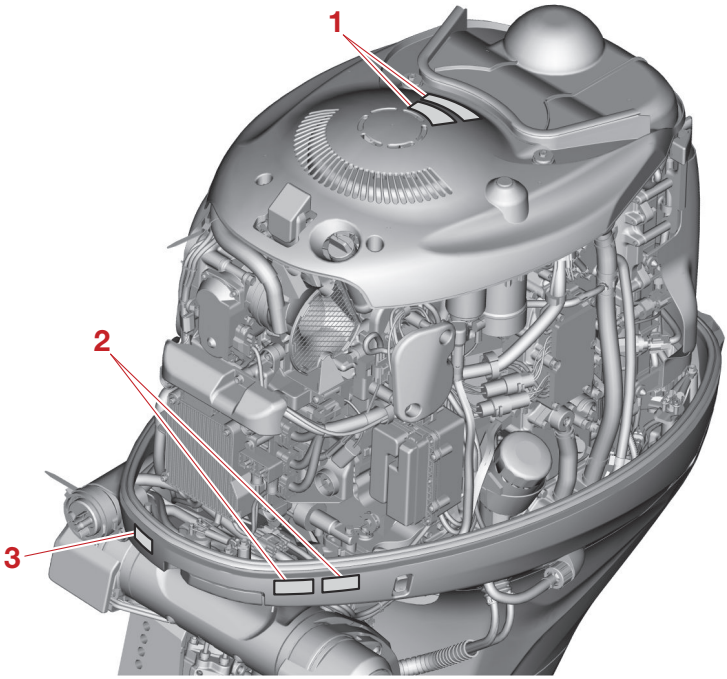

1

2

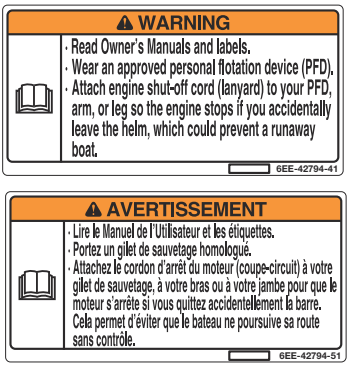

EMU34652

Contents of labels

The above warning labels mean as follows.

1

EWM01682

WARNING

- **Keep hands, hair, and clothing away from rotating parts while the engine is running.**
- **Do not touch or remove electrical parts when starting or during operation.**

2

EWM01672

WARNING

- **Read Owner's Manuals and labels.**
- **Wear an approved personal flotation device (PFD).**
- **Attach engine shut-off cord (lanyard) to your PFD, arm, or leg so the engine stops if you accidentally leave the helm, which could prevent a runaway boat.**

EMU33851

Other labels

3

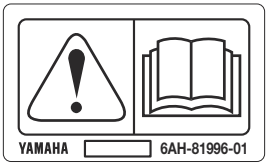

EMU35134

Symbols

The following symbols mean as follows.

Notice/Warning

ZMU05696

Read Owner's Manual

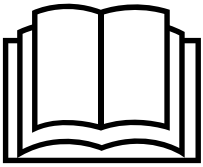

ZMU05664

Hazard caused by continuous rotation

ZMU05665

Electrical hazard

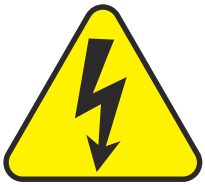

ZMU05666

EMU49582

Use of your data

This is a brief summary of how Yamaha (Yamaha Motor Co., Ltd., and Yamaha Motor Europe N.V.) uses your data. For more details, please go to the specific URL below for the Privacy Policy:

Austria (German)
https://www.yamaha-motor.eu/at/de/privacy/privacy-policy/
Belgium (Dutch)
https://www.yamaha-motor.eu/be/nl/privacy/privacy-policy/
Belgium (French)
https://www.yamaha-motor.eu/be/fr/privacy/privacy-policy/
Bulgaria (Bulgarian)
https://www.yamaha-motor.eu/bg/bg/privacy/privacy-policy/
Czech Republic (Czech)
https://www.yamaha-motor.eu/cz/cs/privacy/privacy-policy/
Denmark (Danish)
https://www.yamaha-motor.eu/dk/da/privacy/privacy-policy/
Finland (Finnish)
https://www.yamaha-motor.eu/fi/fi/privacy/privacy-policy/
France (French)
https://www.yamaha-motor.eu/fr/fr/privacy/privacy-policy/
Germany (German)
https://www.yamaha-motor.eu/de/de/privacy/privacy-policy/
Greece (Greek)
https://www.yamaha-motor.eu/gr/el/privacy/privacy-policy/
Hungary (Hungarian)
https://www.yamaha-motor.eu/hu/hu/privacy/privacy-policy/
Italy (Italian)
https://www.yamaha-motor.eu/it/it/privacy/privacy-policy/
Ireland (English)
https://www.yamaha-motor.eu/ie/en/privacy/privacy-policy/
Netherlands (Dutch)
https://www.yamaha-motor.eu/nl/nl/privacy/Privacybeleid/
Norway (Norwegian)
https://www.yamaha-motor.eu/no/nb/privacy/privacy-policy/
Poland (Polish)
https://www.yamaha-motor.eu/pl/pl/prywatnosc/polityka-prywatnosci/
Portugal (Portuguese)
https://www.yamaha-motor.eu/pt/pt/privacy/privacy-policy/
Romania (Romanian)
https://www.yamaha-motor.eu/ro/ro/privacy/privacy-policy/

Spain (Spanish)
https://www.yamaha-motor.eu/es/es/privacy/privacy-policy/
Sweden (Swedish)
https://www.yamaha-motor.eu/se/sv/privacy/privacy-policy/
Switzerland (German)
https://www.yamaha-motor.eu/ch/de/privacy/privacy-policy/
Switzerland (French)
https://www.yamaha-motor.eu/ch/fr/privacy/privacy-policy/
Turkey (Turkish)
https://www.yamaha-motor.eu/tr/tr/privacy/privacy-policy/
U.K. (English)
https://www.yamaha-motor.eu/gb/en/privacy/privacy-policy/

What data we collect? and How we collect your data?

This outboard motor collects three types of data through integrated Engine Control Units (ECU).: (1) Outboard motor serial number; (2) live data showing the performance of the outboard motor such as engine/motor operating state, boat speed, mileage; and (3) other data showing the status of the outboard motor such as diagnostic trouble code (DTC).

The collected data will be uploaded to server at Yamaha Motor Co., Ltd. by attaching a special Yamaha diagnostic tool to the outboard motor, only when maintenance checks or service procedures are performed.

How will we use your data?

Yamaha use collected data from your outboard motor, (1) to conduct adequate maintenance service including diagnostics, (2) to implement proper warranty claim judgement, (3) to conduct research and development of outboard motor, (4) to provide and improve quality of products, features, and services, (5) to ensure our business purpose, and (6) to comply with requirements of laws and regulations.

How we share your data?

We may share your data with: (i)our subsidiaries, affiliates, and business partners; (ii) dealers in your country or region, and (iii) contractors within the scope necessary to achieve the purpose of use described above.

How to contact us

Yamaha Motor Co., Ltd., and Yamaha Motor Europe N.V. are joint data controller regarding your data collected. Any questions or complaints regarding the processing of your Personal Data can be submitted in writing to:

Yamaha Motor Europe N.V./Digital Marketing & CRM
– PO Box 75033 – 1117 ZN Schiphol – The Netherlands.

The SOLE PURPOSE of above provided contact information is TO RESPOND DATA PROCESSING INQUIRY AND OTHER KINDS OF INQUIRIES **WILL NOT BE RESPONDED.**

Please provide the following information for the proper handling of your inquiry: **(1) Your Name; (2) Your Email Address; (3) Your Country of Residence; and (4) Your outboard**

motor serial number. We will use your personal information provided only for the purpose of supporting your data processing inquiry.

EMU40501

Specifications

TIP:
"(SUS)" indicates that the specification is for the outboard motor when it is equipped with a stainless steel propeller.

EMU49760

Dimension and weight:
Overall length:
963 mm (37.9 in)
Overall width:
548 mm (21.6 in)
Overall height L:
1742 mm (68.6 in) (F150SA, F200SA)
Overall height X:
1869 mm (73.6 in)
Motor transom height L:
516 mm (20.3 in) (F150SA, F200SA)
Motor transom height X:
642 mm (25.3 in)
Dry weight (SUS) L:
242 kg (534 lb) (F150SA)
243 kg (536 lb) (F200SA)
Dry weight (SUS) X:
243 kg (536 lb) (F150SA)
244 kg (538 lb) (F200SA, LF150SA)
245 kg (540 lb) (LF200SA)

Performance:
Full throttle operating range:
5000–6000 r/min
Rated power:
110.3 kW (150 HP) (F150SA, LF150SA)
147.1 kW (200 HP) (F200SA, LF200SA)
Idle speed (in neutral):
650–750 r/min

Power unit:
Type:
4-stroke DOHC L4 16 valves
Total displacement:
2785 cm^3 (169.9 c.i.)
Bore × stroke:
96.0 × 96.2 mm (3.78 × 3.79 in)
Ignition system:
TCI
Spark plug (NGK):
LFR6A-11
Spark plug gap:
1.0–1.1 mm (0.039–0.043 in)
Steering system:
Remote steering
Starting system:
Electric starter
Starting carburetion system:
Fuel injection
Valve clearance IN (cold engine):
0.17–0.24 mm (0.0067–0.0094 in)
Valve clearance EX (cold engine):
0.31–0.38 mm (0.0122–0.0150 in)
Battery rating (CCA/SAE):
680–1150 A
Battery rating (MCA/ABYC):
770–1370 A
Battery rating (RC/SAE):
160 minutes
Battery rating (CCA/EN):
640–1080 A
Battery rating (20HR/IEC):
80 Ah
Maximum generator output:
50 A

Lower unit:
Gear shift positions:
Forward-neutral-reverse
Gear ratio:
1.86 (26/14) (F200SA, LF200SA)
2.0 (28/14) (F150SA, LF150SA)

Trim and tilt system:
Power trim and tilt
Propeller mark:
M/T (F150SA, F200SA)
ML/TL (LF150SA, LF200SA)

Fuel and oil:

Recommended fuel:
Premium unleaded gasoline (F200SA, LF200SA)
Regular unleaded gasoline (F150SA, LF150SA)
Min. research octane number (RON):
90 (F150SA, LF150SA)
94 (F200SA, LF200SA)
Recommended engine oil:
YAMALUBE 4 or 4-stroke outboard motor oil

Recommended engine oil grade 1:
SAE 10W-30/10W-40/5W-30
API SG/SH/SJ/SL
Engine oil quantity (without oil filter replacement):
4.3 L (4.55 US qt, 3.78 Imp.qt)
Engine oil quantity (with oil filter replacement):
4.5 L (4.76 US qt, 3.96 Imp.qt)
Lubrication system:
Wet sump
Recommended gear oil:
YAMALUBE outboard gear oil or Hypoid gear oil
Recommended gear oil grade:
SAE 90 API GL-4 / SAE 80W API GL-5 / SAE 90 API GL-5
Gear oil quantity:
0.980 L (1.036 US qt, 0.862 Imp.qt)
Recommended hydraulic steering fluid 1:
Shell Tellus S2 V15
Recommended hydraulic steering fluid 2:
Shell Tellus S2 VX15

Noise and vibration level:

Operator sound pressure level (ICOMIA 39/94):
78.8 dB(A)

EMU33556

Installation requirements

EMU33566

Boat horsepower rating

EWM01561

WARNING

Overpowering a boat can cause severe instability.

Before installing the outboard motor(s), confirm that the total horsepower of your outboard motor(s) does not exceed the boat's maximum horsepower rating. See the boat's capacity plate or contact the manufacturer.

EMU40491

Mounting outboard motor

EWM02501

WARNING

- **Improper mounting of the outboard motor could result in hazardous conditions such as poor handling, loss of control, or fire hazards.**
- **Because the outboard motor is very heavy, special equipment and training is required to mount it safely.**

Your dealer or other person experienced in proper rigging should mount the outboard

motor using correct equipment and complete rigging instructions. For further information, see page 52.

EMU34954

Digital electronic control requirements

The digital electronic control is equipped with a start-in-gear protection device(s). This device prevents the engine from starting unless it is in neutral.

EWM01581

WARNING

- **If the engine starts in gear, the boat can move suddenly and unexpectedly, possibly causing a collision or throwing passengers overboard.**
- **If the engine ever starts in gear, the start-in-gear protection device is not working correctly and you should discontinue using the outboard. Contact your Yamaha dealer.**

This digital electronic control unit is only available for the outboard motor which you have purchased.

Prior to use of the digital electronic control unit, set it in order to operate your outboard motor only. Otherwise, it will not be possible to operate the outboard motor.

Perform setting of the outboard motor and the digital electronic control unit in the following cases.

- If a used outboard motor is installed
- If the digital electronic control unit is replaced
- If the ECM (Electronic control module) of the used outboard motor is replaced
- If the ECM (Electronic control module) of the digital electronic control unit is replaced

Consult your Yamaha dealer for setting.

EMU25695

Battery requirements

EMU46560

Battery specifications

For U.S. insular areas

Battery rating (CCA/SAE):
680–1150 A
Battery rating (MCA/ABYC):
770–1370 A
Battery rating (RC/SAE):
160 minutes

For Europe

Battery rating (CCA/EN):
640–1080 A
Battery rating (20HR/IEC):
80 Ah

The engine cannot be started if battery voltage is too low.

EMU36293

Mounting battery

Mount the battery holder securely in a dry, well-ventilated, vibration-free location in the boat. **WARNING! Do not put flammable items, or loose heavy or metal objects in the same compartment as the battery. Fire, explosion or sparks could result.**

[EWM01821]

Battery cable

The battery cable size and length are critical. Consult your Yamaha dealer about the battery cable size and length.

EMU36303

Multiple batteries

To connect multiple batteries, such as for multiple engine configurations or for an accessory battery, consult your Yamaha dealer about battery selection and correct wiring.

Battery isolator

Your outboard motor is capable of charging an accessory battery separate from the starting battery using an optional isolator lead. Contact your Yamaha dealer for installation of an optional isolator lead with overcurrent protection.

EMU41604

Propeller selection

Next to selecting an outboard motor, selecting the right propeller is one of the most important purchasing decisions a boater can make. The type, size, and design of your propeller have a direct impact on acceleration, top speed, fuel economy, and even engine life. Yamaha designs and manufactures propellers for every Yamaha outboard motor and every application.

Your Yamaha dealer can help you select the right propeller for your boating needs. Select a propeller that will allow the engine to reach the middle or upper half of the operating range at full throttle with the maximum boatload. Generally, select a larger pitch propeller for a smaller operating load and a smaller pitch propeller for a heavier load. If you carry loads that vary widely, select the propeller that lets the engine run in the proper range for your maximum load but remember that you may need to reduce your throttle setting to stay within the recommended engine speed range when carrying lighter loads.

Yamaha recommends to use a propeller suitable for the “Shift Dampener System (SDS)”. For further information, consult your Yamaha dealer.

To check the propeller, see page 102.

Propeller example

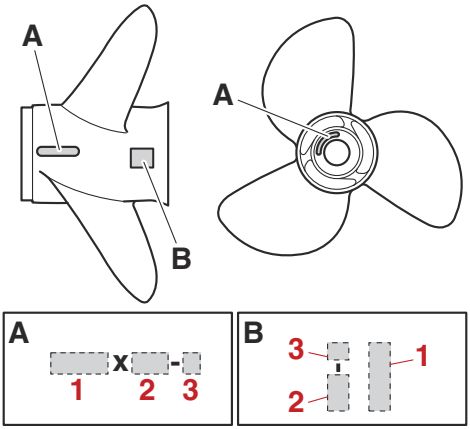

1. Propeller diameter in inches
2. Propeller pitch in inches
3. Type of propeller (propeller mark)

EMU36313

Counter rotation models

Standard outboard motors rotate clockwise. Counter rotation models rotate counterclockwise and are typically used in multiple motor setups.

On counter rotation models, be sure to use a propeller intended for counterclockwise rotation. These propellers are identified with the letter “L” after the size indication on the propeller. **WARNING! Never use a standard propeller with a counter rotation motor, or a counter rotation propeller with a standard motor. Otherwise the boat could go in the direction opposite of that expected (for example, reverse instead of forward), which could lead to an accident.** [EWM01811]

For instructions on propeller removal and installation, see page 102.

EMU35141

Start-in-gear protection

Yamaha outboard motors or Yamaha-approved digital electronic control units are equipped with start-in-gear protection device(s). This feature permits the engine to be started only when it is in neutral. Always select neutral before starting the engine.

EMU41953

Engine oil requirements

Select an oil grade according to the average temperatures in the area where the outboard motor will be used.

Recommended engine oil:
YAMALUBE 4 or 4-stroke outboard motor oil
Recommended engine oil grade 1:
SAE 10W-30/10W-40/5W-30
API SG/SH/SJ/SL
Recommended engine oil grade 2:
SAE 15W-40/20W-40/20W-50
API SH/SJ/SL
Engine oil quantity (without oil filter replacement):
4.3 L (4.55 US qt, 3.78 Imp.qt)
Engine oil quantity (with oil filter replacement):
4.5 L (4.76 US qt, 3.96 Imp.qt)

If oil grades listed under Recommended engine oil grade 1 are not available, select an alternative oil grade listed under Recommended engine oil grade 2.

Recommended engine oil grade 1

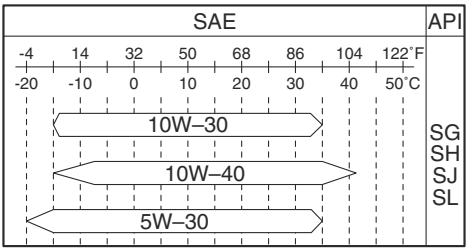

ZMU08143

Recommended engine oil grade 2

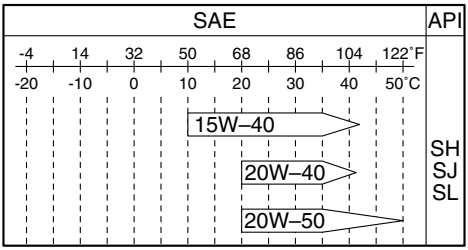

ZMU06855

EMU49553

Electro hydraulic steering fluid requirements

For the electro hydraulic steering fluid, use the following recommended fluids.

Recommended hydraulic steering fluid 1:
Shell Tellus S2 V15
Recommended hydraulic steering fluid 2:
Shell Tellus S2 VX15

EMU36361

Fuel requirements

EMU49300

Gasoline

Use a good quality gasoline that meets the minimum octane rating.

Recommended fuel:
Premium unleaded gasoline (F200SA, LF200SA)
Regular unleaded gasoline (F150SA, LF150SA)
Min. research octane number (RON):
90 (F150SA, LF150SA)
94 (F200SA, LF200SA)

ECM01982

NOTICE

- **Do not use leaded gasoline. Leaded gasoline can seriously damage the engine.**
- **Avoid getting water and contaminants in the fuel tank. Contaminated fuel can cause poor performance or engine damage. Use only fresh gasoline that has been stored in clean containers.**

TIP:

- This mark identifies the recommended fuel for this outboard motor as specified by European regulation (EN228).
- Check that gasoline nozzle has the same identifier when fueling.

Gasohol

There are two types of gasohol: gasohol containing ethanol (E5 and E10) and that containing methanol. Ethanol can be used if the ethanol content does not exceed 10% and the fuel meets the minimum octane ratings. E85 is a fuel containing 85% ethanol and must not be used in your outboard motor. All ethanol blends containing more than 10% ethanol can cause fuel system damage or cause engine starting and running problems. Yamaha does not recommend gasohol containing methanol because it can cause fuel system damage or engine performance problems.

It is recommended that you install a water-separating marine fuel filter assembly (10 micron minimum) between your boat's fuel tank and outboard motor when using ethanol. Ethanol is known to allow moisture to be absorbed into boat fuel tanks and systems. Moisture in the fuel can cause corrosion of metallic fuel system components, starting and running complaints and require additional fuel system maintenance.

EMU36881

Muddy or acidic water

Yamaha strongly recommends that you have your dealer install the optional chromium-plated water pump kit if you use the outboard motor in muddy or acidic water conditions. However, depending on the model it might not be required.

EMU36331

Anti-fouling paint

A clean hull improves boat performance. The boat bottom should be kept as clean of marine growth as possible. If necessary, the boat bottom can be coated with an

anti-fouling paint approved for your area to inhibit marine growth.
Do not use anti-fouling paint which includes copper or graphite. These paints can cause more rapid engine corrosion.

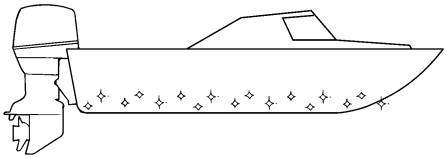

ZMU05176

EMU40302

Outboard motor disposal requirements

Never illegally discard (dump) the outboard motor. Yamaha recommends consulting the dealer about discarding the outboard motor.

EMU36353

Emergency equipment

Keep the following items onboard in case there is trouble with the outboard motor.

- A tool kit with assorted screwdrivers, pliers, wrenches (including metric sizes), and electrical tape.
- Waterproof flashlight with extra batteries.
- An extra engine shut-off cord (lanyard) with clip.
- Spare parts, such as an extra set of spark plugs.

Consult your Yamaha dealer for details.

EMU39001

Emission control information

The following labels are affixed to outboard motors that conform to US regulations.

EMU25232

This engine conforms to U.S. Environmental Protection Agency (EPA) regulations for marine SI engines. See the label affixed to your engine for details.

EMU31563

Approval label of emission control certificate

This label is attached at the location shown.
New Technology; (4-stroke) MFI

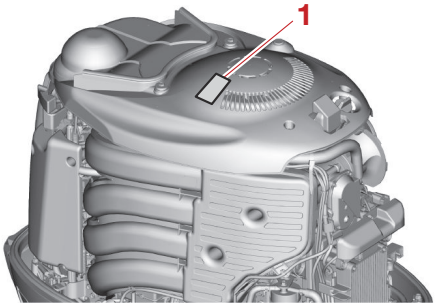

1. Approval label location

EMU25275

Star labels

Your outboard motor is labeled with a California Air Resources Board (CARB) star label. See below for a description of your particular label.

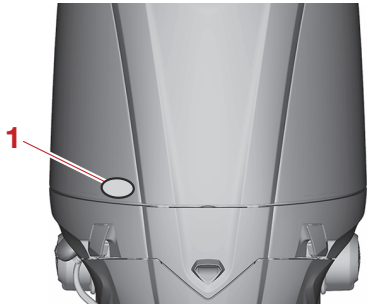

1. Star label location

EMU40331

One Star—Low Emission

The one-star label identifies engines that meet the Air Resources Board's Personal Watercraft and Outboard marine engine 2001 exhaust emission standards. Engines meeting these standards have 75% lower emissions than conventional carbureted two-stroke engines. These engines are equivalent to the U.S. EPA's 2006 standards for marine engines.

ZMU01702

EMU40341

Two Stars—Very Low Emission

The two-star label identifies engines that meet the Air Resources Board's Personal Watercraft and Outboard marine engine 2004 exhaust emission standards. Engines meeting these standards have 20% lower emissions than One Star-Low-Emission engines.

ZMU01703

EMU40351

Three Stars—Ultra Low Emission

The three-star label identifies engines that meet the Air Resources Board's Personal Watercraft and Outboard marine engine 2008 exhaust emission standards or the Sterndrive and Inboard marine engine 2003-2008 exhaust emission standards. Engines meeting these standards have 65% lower emissions than One Star-Low-Emission engines.

ZMU01704

EMU33862

Four Stars—Super Ultra Low Emission

The four-star label identifies engines that meet the Air Resources Board's Sterndrive and Inboard marine engine 2009 exhaust emission standards. Personal Watercraft and Outboard marine engines may also comply with these standards. Engines meeting these standards have 90% lower

emissions than One Star-Low-Emission engines.

ZMU05663

EMU48680

Components diagram

TIP:

* May not be exactly as shown; also may not be included as standard equipment on all models (order from dealer).

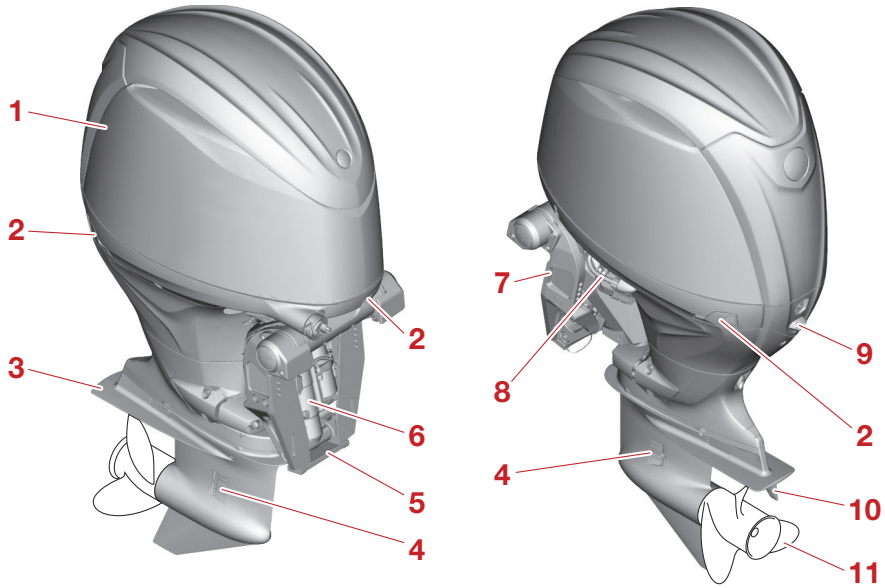

1. Top cowling
2. Cowling lock lever
3. Anti-cavitation plate
4. Cooling water inlet
5. Anode
6. Power trim and tilt unit
7. Clamp bracket
8. Flushing device
9. Idle hole
10. Trim tab (anode)
11. Propeller*

Components

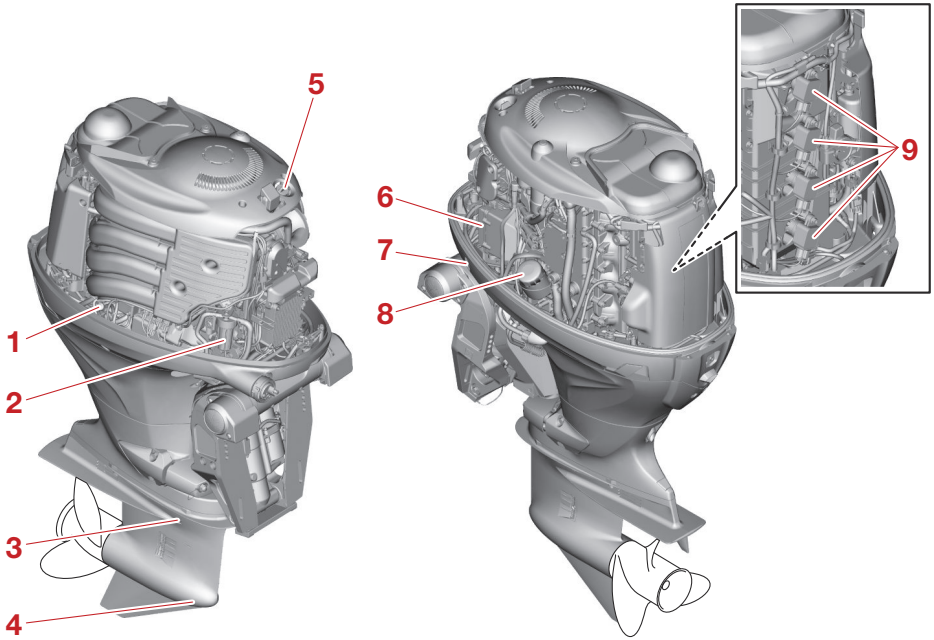

1. Oil dipstick
2. Fuel filter
3. Oil level plug
4. Gear oil drain screw
5. Oil filler cap
6. Fuse box
7. Power trim and tilt switch
8. Oil filter
9. Ignition coil

EMU46733

Optional items

The following items are available from your Yamaha dealer. For details, consult your Yamaha dealer.

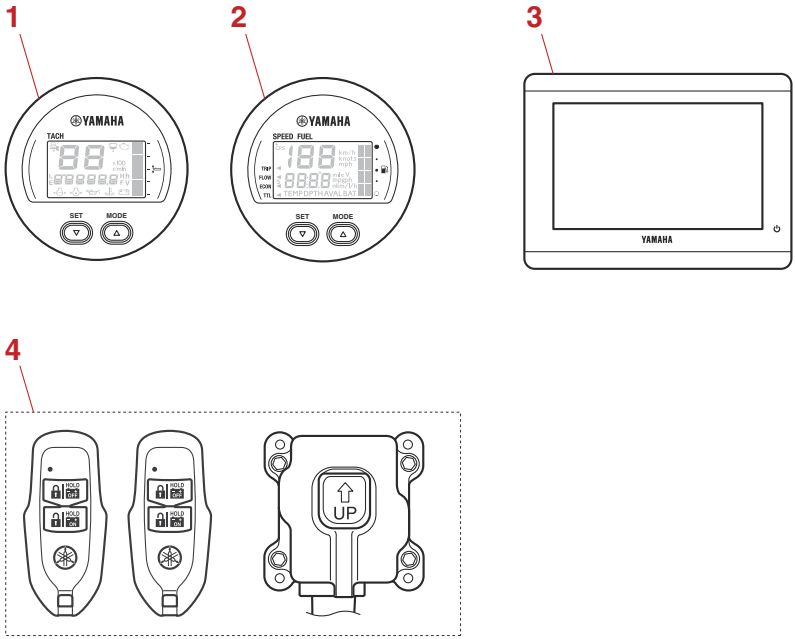

1. 6Y8 Multifunction tachometer
2. 6Y8 Multifunction speed & fuel meter
3. CL5 Display
4. Yamaha Security System (Y-COP)

Components

For single-engine boats (6X6 switch)

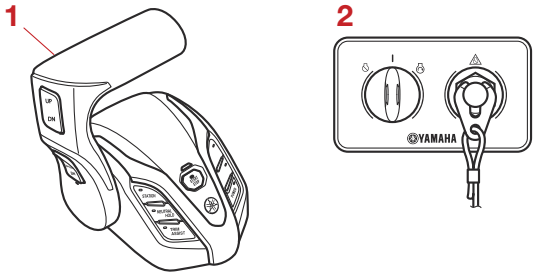

1. Digital electronic control
2. Switch panel

For single-engine boats (EKS)

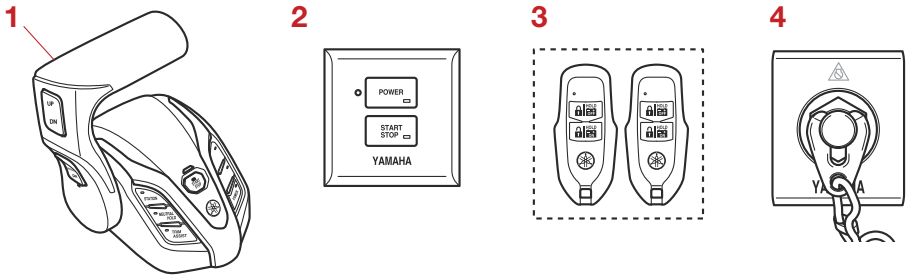

1. Digital electronic control
2. POWER panel
3. Key fob
4. Engine shut-off switch panel

For twin-engine boats (6X6 switch)

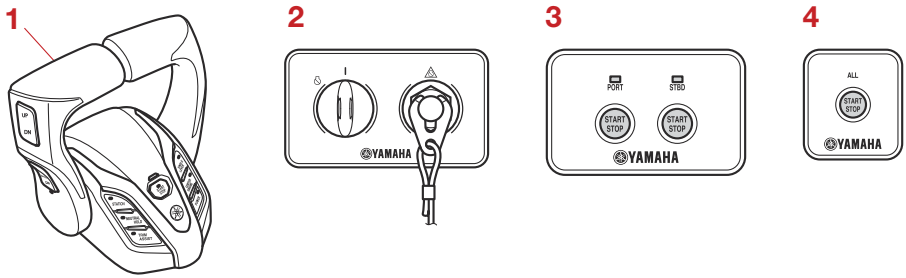

1. Digital electronic control (twin type)
2. Switch panel
3. Start/Stop switch panel
4. All Start/Stop switch panel

For twin-engine boats (EKS)

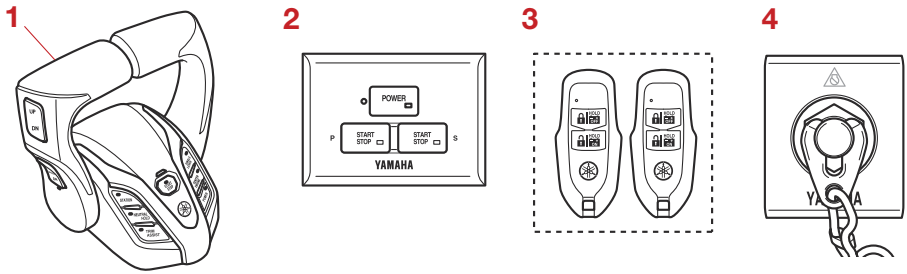

1. Digital electronic control (twin type)
2. POWER panel
3. Key fob
4. Engine shut-off switch panel

EMU48695

Helm Master™ EX (upgradable)

TIP:

For further information about the Helm Master EX, consult your Yamaha dealer.

Joystick

Because the joystick allows you to move the boat laterally left or right or pivot it 360 degrees in place using the single joystick lever, you can maneuver the boat easily when leaving or arriving at a dock or when traveling in narrow waterways or other tight spaces, such as in marinas.

Autopilot

The Autopilot supports steering operations, allowing you to keep correct bow direction and travel while maintaining a constant route.

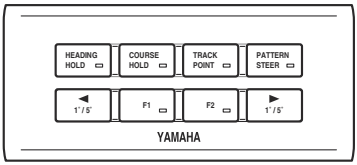

EMU49012

Digital electronic control

The digital electronic control actuates the shifter, throttle and remote electrical operations. Make sure that the digital electronic control-alert indicator lights in blue and that the digital electronic control unit is correctly connected to the outboard motor.

TIP:

- The “CENTER ENGINE” switch can be used to control triple engines.
- The “STATION” switch cannot be used for single station models.
- This manual mainly covers basic operation. For more information, see the 6X9 DIGITAL ELECTRONIC CONTROL operation manual.

Single engine

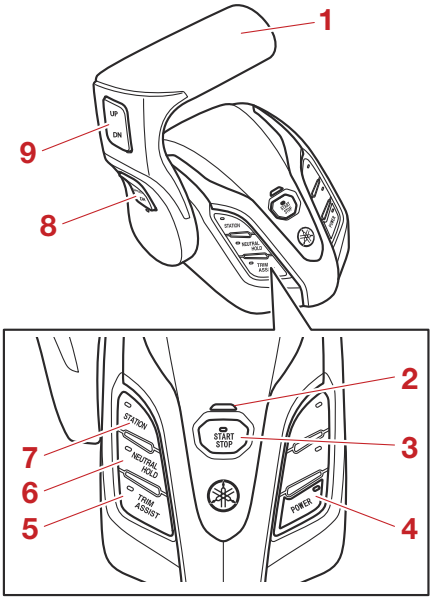

1. Control lever
2. DEC alert indicator/Lock indicator
3. “START/STOP” switch
4. “POWER” switch
5. “TRIM ASSIST” switch
6. “NEUTRAL HOLD” switch
7. “STATION” switch
8. Speed control switch
9. Power trim and tilt switch

Twin engines

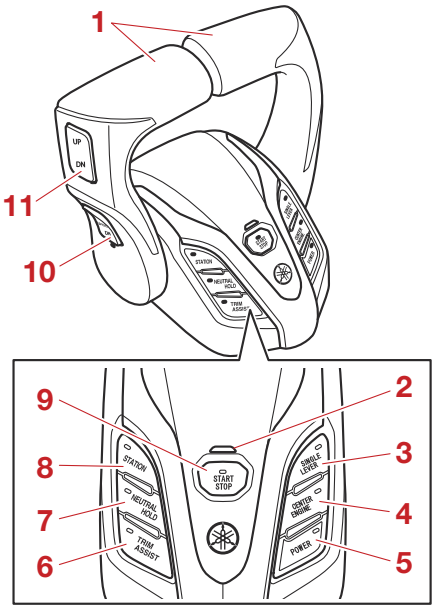

1. Control lever
2. DEC alert indicator/Lock indicator
3. “SINGLE LEVER” switch
4. “CENTER ENGINE” switch (triple engines)
5. “POWER” switch
6. “TRIM ASSIST” switch
7. “NEUTRAL HOLD” switch
8. “STATION” switch
9. “START/STOP” switch
10. Speed control switch
11. Power trim and tilt switch (all engines)

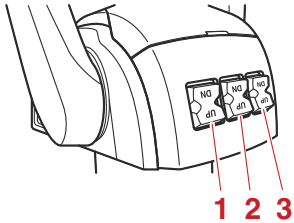

1. Power trim and tilt switch (starboard side engine)
2. Power trim and tilt switch (center engine)
3. Power trim and tilt switch (port side engine)

TIP:
The power trim and tilt switch of the center engine can be used to control triple engines.

EMU48471

Control lever

Lowering the lever from the neutral position to the bow side 22.5° (a detent can be felt) engages the forward gear. Lowering the lever to the stern side engages the reverse gear and the engine begins to run at the lowest speed. Lowering the lever farther opens the throttle, and the engine will begin to accelerate.

TIP:
You can adjust the resistance of the control lever movement. For further information, see the 6X9 DIGITAL ELECTRONIC CONTROL operation manual.

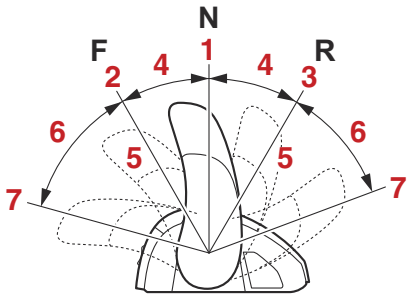

1. Neutral "**N**"
2. Forward "**F**"
3. Reverse "**R**"
4. Shift
5. Fully closed
6. Throttle
7. Fully open

EMU49002

Power trim and tilt switches

Pushing the switch "**UP**" (up) trims the outboard motor up, and then tilts it up. Pushing the switch "**DN**" (down) tilts the outboard motor down and trims it down. When the switch is released, the outboard motor will stop in its current position.

For multiple engine applications, the switch on the control lever controls all outboard motors at the same time.

Single engine

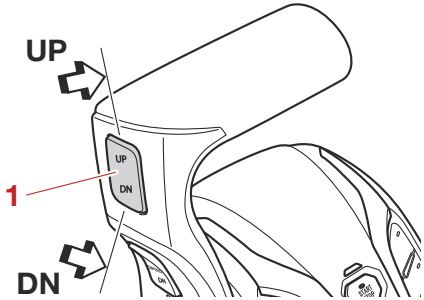

1. Power trim and tilt switch

Twin engines

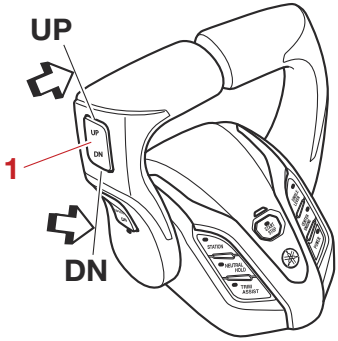

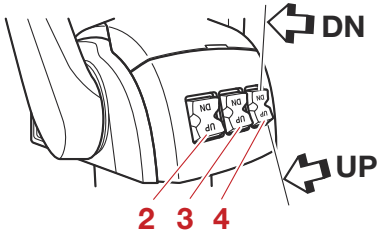

1. Power trim and tilt switch (all engines)
2. Power trim and tilt switch (starboard side engine)
3. Power trim and tilt switch (center engine)
4. Power trim and tilt switch (port side engine)

TIP:

The power trim and tilt switch of the center engine can be used to control triple engines.

EMU48491

DEC alert indicator

The alert indicator changes from blue to orange if a connection problem between the digital electronic control and the outboard motor occurs. A beep also sounds (repeatedly on and off) to alert the operator. For more information, consult your Yamaha dealer.

Single engine

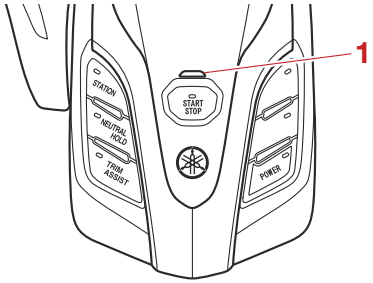

1. DEC alert indicator

Single engine

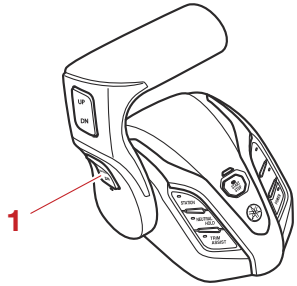

1. Speed control switch

Twin engines

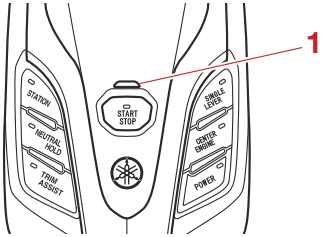

1. DEC alert indicator

Twin engines

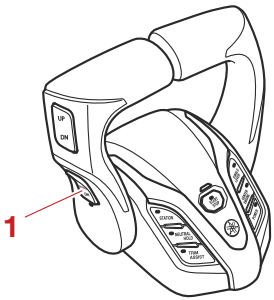

1. Speed control switch

EMU48504

Speed control switch

There are two modes for keeping the engine speed and speed. Pressing the "**UP**" (up) /"**DN**" (down) switch enables you to keep the engine speed or to adjust the speed.

TIP:

For more information on the speed control function, see the 6X9 DIGITAL ELECTRONIC CONTROL operation manual.

EMU48512

Neutral hold switch

When the "NEUTRAL HOLD" switch is pressed, the buzzer will sound and the LED will come on. You will be able to open or close the throttle with the shift control in neutral. This can also be done when the control lever is set in reverse. For further information, see page 68.

Single engine

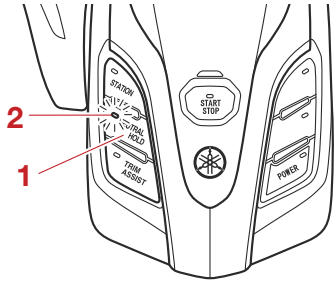

1. “NEUTRAL HOLD” switch
2. LED

Twin engines

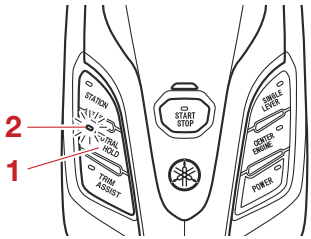

1. “NEUTRAL HOLD” switch
2. LED

EMU48550

Single lever switch

For multiple engines, when the “SINGLE LEVER” switch is pressed, the buzzer will sound, the LED will come on, and the port side control lever will allow you to perform shift and throttle operations for all outboard motors that have been started. For further information, see page 69.

TIP:

- When the single lever switch is activated, the starboard control lever is inoperable.
- You must start all the engines to enable the single lever switch.

Twin engines

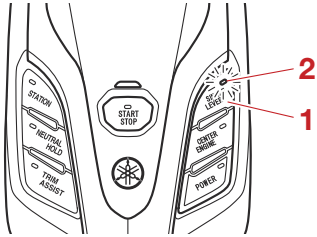

1. “SINGLE LEVER” switch
2. LED

EMU49271

Trim Assist switch

This function automatically sets the outboard motor trim angle according to the engine speed.

Enabling the trim assist switch allows the trim assist function to operate.

TIP:

For more information on the “Trim Assist” function, see the 6X9 DIGITAL ELECTRONIC CONTROL operation manual.

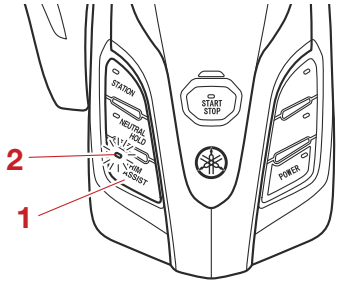

1. “TRIM ASSIST” switch
2. LED

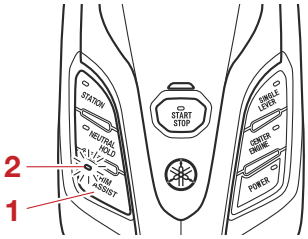

1. “TRIM ASSIST” switch
2. LED

To set
When the “TRIM ASSIST” switch is pressed, the beep sounds and the LED turns on.
To release
When the “TRIM ASSIST” switch is pressed, the beep sounds and the LED turns off.

EMU48562

Electronic Key Switch (EKS)

The EKS consists of the Electronic Key Switch panel and key fobs.

TIP:

This manual mainly covers basic operation. For more information, see the 6X9 DIGITAL ELECTRONIC CONTROL operation manual.

EMU48572

Electronic Key Switch panel

Pushing the “POWER” switch on the POWER panel allows the LED to come on, the engine to start or stop, and any accessories to be available.

The engine can be started or turned off by pressing the “START/STOP” switch on the POWER panel. The LED for the engine that has started will come on.

For multiple engine applications, it is possible to start or turn off individual engines by pressing the “START/STOP” switch on the “START/STOP” panel.

Single engine

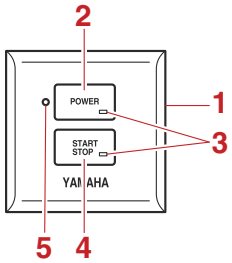

1. POWER panel
2. “POWER” switch
3. LED
4. “START/STOP” switch
5. Lock indicator

Twin engines

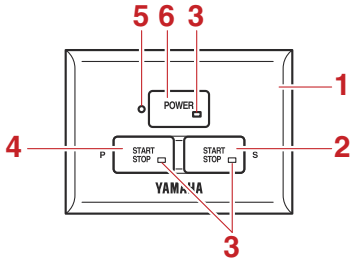

1. POWER panel
2. “START/STOP” switch (Starboard side engine)
3. LED
4. “START/STOP” switch (Port side engine)
5. Lock indicator
6. “POWER” switch

EMU48580

Key fob

When the POWER switch is turned off, you can lock and unlock the outboard motor by using the Lock button and Unlock button.

When the button is operated, the LED will come on. This manual mainly covers basic operation. For further information, see the 6X9 DIGITAL ELECTRONIC CONTROL operation manual.

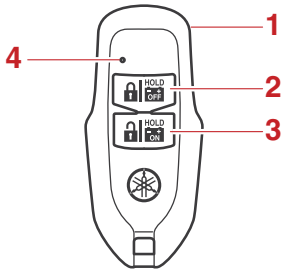

1. Key fob
2. Lock button
3. Unlock button
4. LED

The key fob is provided with two cards on which are written its factory default. Keep these cards in safe places, because you will need one of them to start the engine if the key fob is lost or malfunctions, or its battery fails.

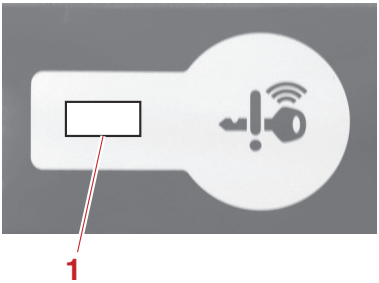

1. Default password

TIP:

- If the key fob malfunctions and the engine cannot be started, the engine can be started by inputting the PIN code set for the key fob into the POWER panel.
- You can reset the password. If you change the password, the factory default that is provided will become disabled.

EMU48750

Engine shut-off cord (lanyard) and clip

The clip must be attached to the engine shut-off switch for the engine to run. The cord should be attached to a secure place on the operator's clothing, or arm or leg. Should the operator fall overboard or leave the helm, the cord will pull out the clip, stopping ignition to the engine. This will prevent the boat from running away under power.

EWM01791

WARNING

- **Attach the engine shut-off cord to a secure place on your clothing, or your arm or leg while operating.**
- **Do not attach the cord to clothing that could tear loose. Do not route the cord where it could become entangled, preventing it from functioning.**
- **Avoid accidentally pulling the cord during normal operation. Loss of engine power means the loss of most steering control. Also, without engine power, the boat could slow rapidly. This could cause people and objects in the boat to be thrown forward.**

TIP:

The engine cannot be started with the clip removed.

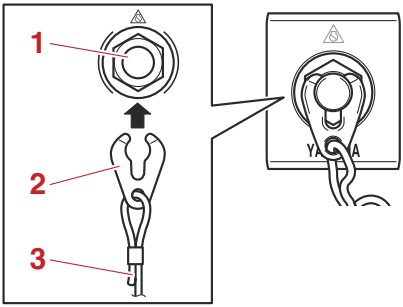

1. Engine shut-off switch
2. Clip
3. Engine shut-off cord (lanyard)

EMU48643

6X6 switch

EMU46753

Yamaha Security System (Y-COP/ Optional)

ECM02461

NOTICE

The Yamaha Security System is sold in conformity with the relevant laws and regulations regarding radio wave transmission. Therefore, if this product is used outside the country where it was sold, it may violate the laws or regulations regarding radio wave transmission in the country it is used in. For details, consult your Yamaha dealer.

The Yamaha Security System, which protects against theft, consists of the receiver and key fobs. The Yamaha Security System is available from your Yamaha dealer. For details, consult your Yamaha dealer.

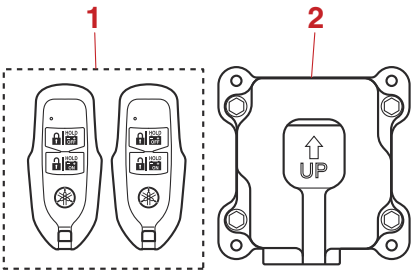

1. Key fob
2. Receiver

The engine cannot be started if the security system is in the lock mode. The engine can be started only in the unlock mode. For more information, see the installation and owner's manual included with the security system.

EMU41554

Main switch

The main switch controls the ignition system; its operation is described below.

- "OFF" **(off)**

With the main switch in the "OFF" (off) position, the electrical circuits are off, and the key can be removed.

- "ON" **(on)**

With the main switch in the "ON" (on) position, the electrical circuits are on, and the key cannot be removed. The engine can be started by pressing the Start/Stop button.

- "START" **(start)**

With the main switch in the "START" (start) position, the starter motor turns to start the engine. When the key is released, it returns automatically to the "ON" (on) position.

Single engine

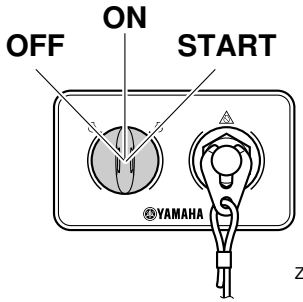

ZMU07145

Twin engines

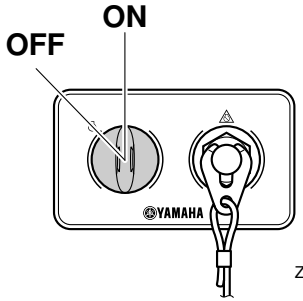

ZMU07146

EMU41622

Start/Stop switch panel

The engine can be started or turned off by pressing the Start/Stop button. For twin type, it is possible to start or turn off individual engine. The indicator for the corresponding engine will come on.

- **PORT:**Port side engine
- **STBD:**Starboard side engine

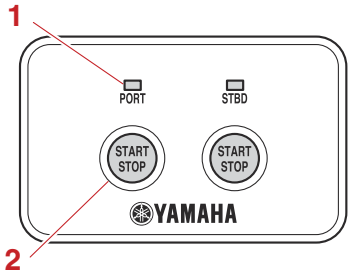

1. Indicator
2. Start/Stop button

EMU41633

All Start/Stop switch panel (optional)

The Start/Stop button allows all engines to start or turn off.

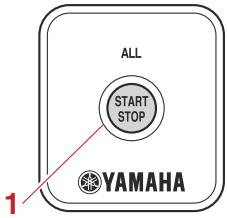

1. All Start/Stop button

EMU35775

Engine shut-off cord (lanyard) and clip

The clip must be attached to the engine shut-off switch for the engine to run. The cord should be attached to a secure place on the operator's clothing, or arm or leg. Should the operator fall overboard or leave the helm, the cord will pull out the clip, stopping ignition to the engine. This will prevent the boat from running away under power.

EWM01791

WARNING

- **Attach the engine shut-off cord to a secure place on your clothing, or your arm or leg while operating.**
- **Do not attach the cord to clothing that could tear loose. Do not route the cord where it could become entangled, preventing it from functioning.**
- **Avoid accidentally pulling the cord during normal operation. Loss of engine power means the loss of most steering control. Also, without engine power, the boat could slow rapidly. This could cause people and objects in the boat to be thrown forward.**

TIP:

The engine cannot be started with the clip removed.

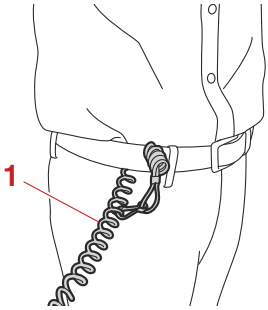

1. Engine shut-off cord (lanyard)

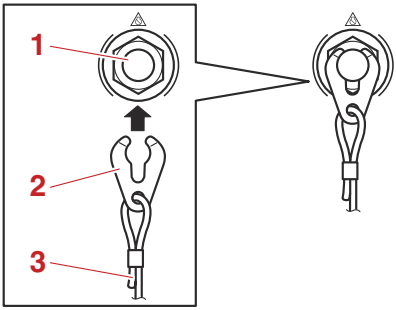

1. Engine shut-off switch
2. Clip
3. Engine shut-off cord (lanyard)

EMU48651

Outboard motor equipment

EMU26156

Power trim and tilt switch on bottom cowling

The power trim and tilt switch is located on the side of the bottom cowling. Pushing the switch "**UP**" (up) trims the outboard motor up, and then tilts it up. Pushing the switch "**DN**" (down) tilts the outboard motor down and trims it down. When the switch is released, the outboard motor will stop in its current position.

For instructions on using the power trim and tilt switch, see page 76.

EWM01032

WARNING

Use the power trim and tilt switch located on the bottom cowling only when the boat is at a complete stop with the engine off. Attempting to use this switch while the boat is moving could increase the risk of falling overboard and could distract the operator, increasing the risk of collision with another boat or an obstacle.

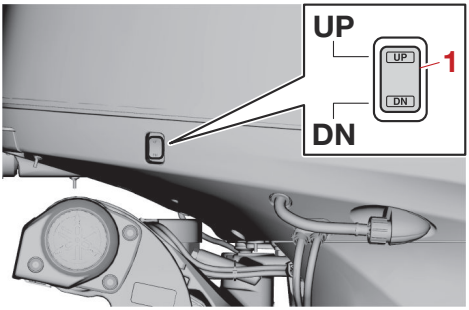

1. Power trim and tilt switch

EMU26246

Trim tab with anode

EWM00841

WARNING

An improperly adjusted trim tab could cause difficult steering. Always test run after the trim tab has been installed or replaced to be sure steering is correct. Be sure you have tightened the bolt after adjusting the trim tab.

The trim tab should be adjusted so that the steering control can be turned to either the right or left by applying the same amount of force.

If the boat tends to veer to the left (port side), turn the trim tab rear end to the port side “A” in the figure. If the boat tends to veer to the right (starboard side), turn the trim tab end to the starboard side “B” in the figure.

ECM00841

NOTICE

The trim tab also serves as an anode to protect the engine from electrochemical corrosion. Never paint the trim tab as it will become ineffective as an anode.

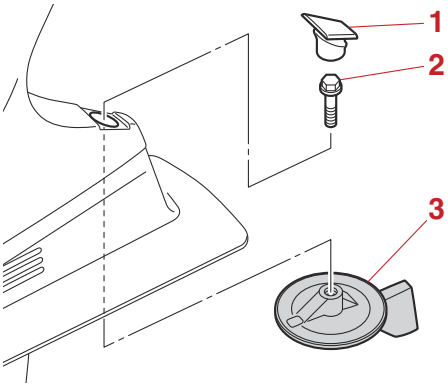

1. Cap
2. Bolt
3. Trim tab

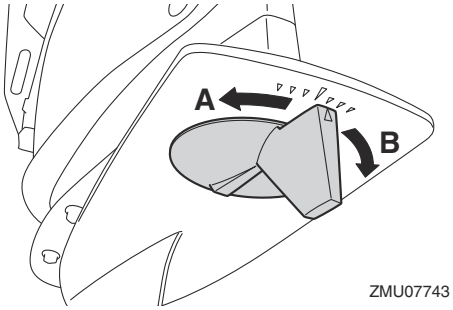

Bolt tightening torque:
42 N·m (4.2 kgf·m, 31 lb·ft)

EMU26342

Tilt support lever for power trim and tilt model

To keep the outboard motor in the tilted up position, lock the tilt support lever to the clamp bracket.

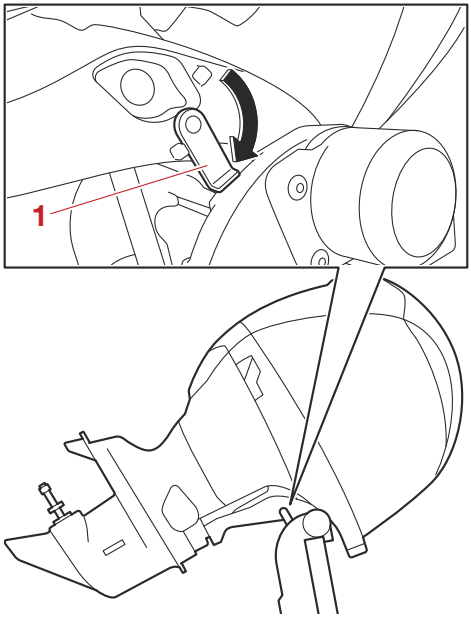

1. Tilt support lever

ECM00661

NOTICE

Do not use the tilt support lever or knob when trailering the boat. The outboard motor could shake loose from the tilt support and fall. If the motor cannot be trailered in the normal running position, use an additional support device to secure it in the tilt position.

EMU40762

Cowling lock lever

The cowling lock levers are used to secure the top cowling.

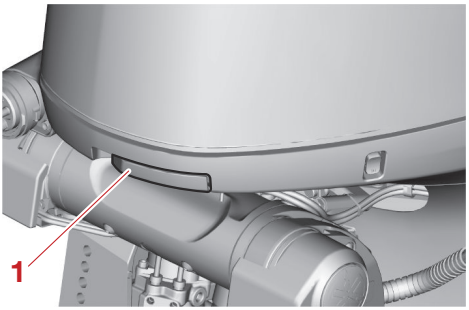

1. Cowling lock lever

1. Cowling lock lever

EMU40803

Flushing device

The flushing device is used to clean the cooling water passages of the outboard motor using a garden hose and tap water. For instructions on using the flushing device, see page 85.

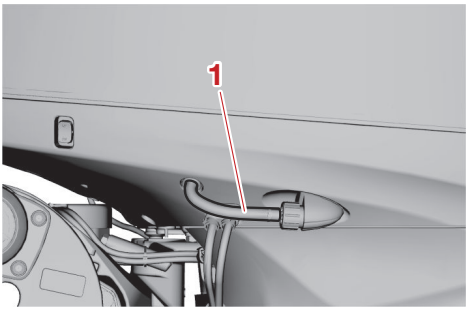

1. Flushing device

EMU41312

Fuel filter

The fuel filter functions to remove foreign material and separate water from the fuel. If water separated from the fuel exceeds a specific volume, the alert system will activate. For further information, see page 50.

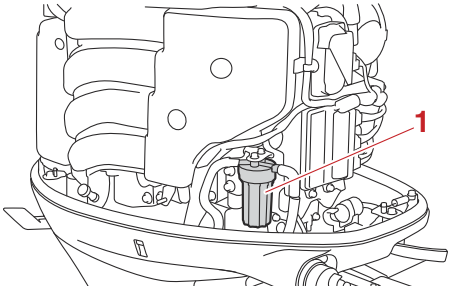

1. Fuel filter

EMU49441

CL5 Display

The CL5 Display shows engine status and alert information. The display can be changed. This manual mainly covers the alert display.

If a warning message appears on the CL5 Display, follow the instructions on the display.

TIP:

- The functions shown in the display varies according to the equipment of the boat.
- For more information, see the CL5 owner's manual.

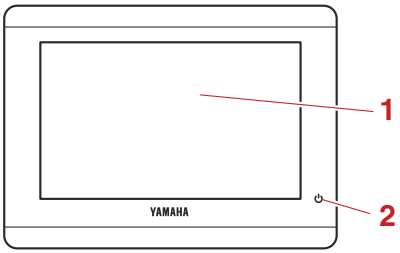

1. Touchscreen
2. Power button

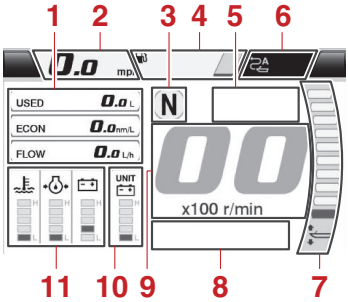

1. Boat status
2. Speedometer
3. Shift position
4. Tank level
5. Engine condition
6. Boat control indicator
7. Trim angle
8. Engine alert
9. Tachometer
10. Sub status
11. Engine status

Engine condition icons

Orange icons indicate engine conditions.

- **Yamaha Security System indicator "" (optional)**
  This indicator appears when the Yamaha Security System is in lock mode. Make sure it is off before starting the engine.

TIP:

This function is displayed when the 6X6 switch panel is equipped.

- **Engine warm-up indicator ""**
  This indicator appears while the engine is being warmed up and goes off when warming-up is finished.
- **Engine synchronization indicator ""**
  In multiple engine types, this indicator appears while the engines are under synchronization control. It goes off when engine synchronization control is released.

Engine alert icons

Red icons indicate engine abnormalities. When an abnormality occurs, a pop-up window will be displayed, and the buzzer will sound.

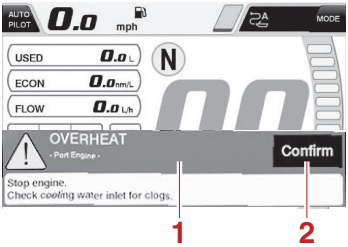

1. Pop-up window
2. Confirm button

Press the confirm button to change to the normal display. The engine alert icon will start to blink.

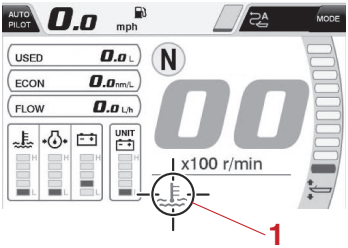

1. Engine alert icon

ECM00093

NOTICE

Do not continue to operate the engine if an alert device has activated. Consult your Yamaha dealer if the problem cannot be located and corrected.

The engine alert icon will appear according to the kind of abnormality. The symbols and their explanations are described below.

- **Overheat alert "⚠"**
  If the engine temperature rises too high while cruising, this alert will be activated. Stop the engine immediately. Check the cooling water inlet for clogging, and clear it if it is blocked.

ECM01594

NOTICE

- **Do not continue to run the engine if the overheat-alert indicator blinks. Serious engine damage will occur.**
- **Do not continue to operate the engine if an alert device has activated. Consult your Yamaha dealer if the problem cannot be located and corrected.**

- **Low oil pressure alert "⚠"**
  If the engine oil pressure drops too low, this alert will be activated. Stop the engine immediately. Check the engine oil level and replenish oil if necessary. If the alert device has activated while the appropriate engine oil level is maintained, consult your Yamaha dealer.

ECM01602

NOTICE

Do not continue to run the engine if the low oil pressure alert device has activated. Serious engine damage will occur.

- **Water in Fuel Alert "⚠"**
  If water has accumulated in the water separator (fuel filter) while cruising, this alert will be activated. Stop the engine immediately and see page 112 of this manual to drain the water from the fuel filter. Consult a Yamaha dealer.

ECM00911

NOTICE

Gasoline mixed with water could cause damage to the engine.

- **Low battery voltage alert "⚠"**
  If the battery voltage drops, this alert will be activated. If the low battery voltage alert device has activated, return to port

and consult a Yamaha dealer immediately. To charge the battery, consult your Yamaha dealer.

- **Check engine alert "⚙"**
  If the engine malfunctions while cruising, this alert will be activated. Return to port and consult a Yamaha dealer immediately.
- **Check System / Steering Malfunction Alert "⚠"**
  If a malfunction occurs in the system, the system alert will be activated. Return to port immediately and contact your Yamaha dealer.

EMU46654

6Y8 Multifunction meters

There are two types of 6Y8 Multifunction meters.

- 6Y8 Multifunction tachometer
- 6Y8 Multifunction speed & fuel meter

6Y8 Multifunction tachometer

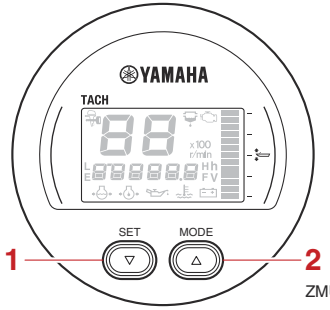

ZMU08407

1. Set button
2. Mode button

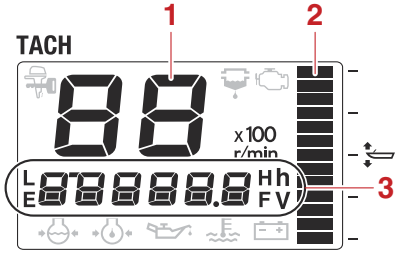

ZMU08408

1. Tachometer
2. Trim meter
3. Multifunction display

6Y8 Multifunction speed & fuel meter

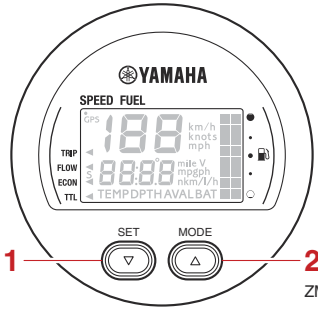

ZMU08409

1. Set button
2. Mode button

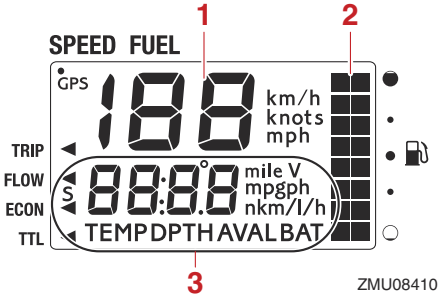

ZMU08410

1. Speedometer
2. Fuel meter
3. Multifunction display

TIP:
The information displayed on the multifunction display can be changed. For information on other settings or changing the displayed information, see the operation manual included with the 6Y8 Multifunction meter.

This manual mainly covers the alert display of the 6Y8 Multifunction tachometer. See the following sections for information about the alert indicators.

Indicators

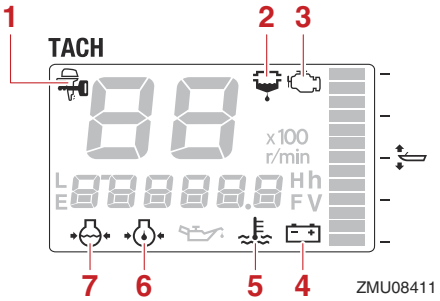

1. Yamaha Security System indicator (optional)
2. Water separator-alert indicator
3. Engine trouble-alert indicator
4. Battery voltage indicator
5. Overheat-alert indicator
6. Low oil pressure-alert indicator
7. Cooling water pressure indicator (optional)

Yamaha Security System indicator (optional)
This indicator appears, when the Yamaha Security System is in lock mode.

Lock mode

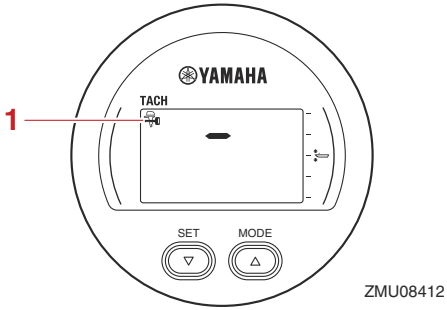

1. Yamaha Security System indicator (optional)

Make sure that the Yamaha Security System indicator is off before starting the engine.

Water separator-alert indicator
If water has accumulated in the water separator (fuel filter) while cruising, the water separator-alert indicator will start to blink.

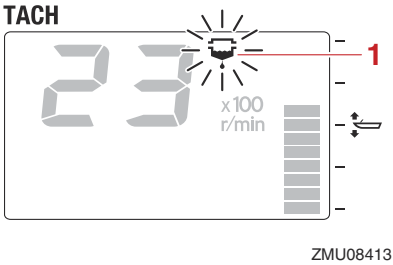

1. Water separator-alert indicator

Stop the engine immediately and see page 112 of this manual to drain the water from the fuel filter. Get back to the port soon and consult a Yamaha dealer immediately.

ECM00911

NOTICE

Gasoline mixed with water could cause damage to the engine.

Engine trouble-alert indicator

If the engine malfunctions while cruising, the engine trouble-alert indicator will start to blink. Get back to the port soon and consult a Yamaha dealer immediately.

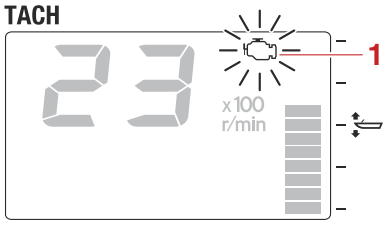

ZMU08414

1. Engine trouble-alert indicator

ECM00921

NOTICE

In such an event, the engine will not operate properly. Consult a Yamaha dealer immediately.

Low battery voltage alert

If the battery voltage drops, the battery voltage value will start to blink.

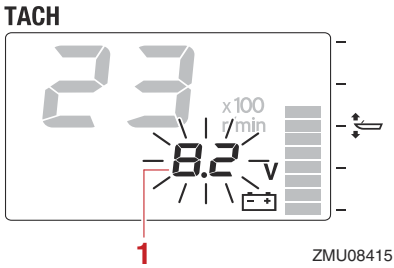

ZMU08415

1. Battery voltage value

Get back to the port soon if the low battery voltage alert device has activated. For charging the battery, consult your Yamaha dealer.

Overheat-alert indicator

If the engine temperature rises too high while cruising, the overheat-alert indicator will start to blink, and the engine speed will automatically decrease to about 2000–3500 r/min.

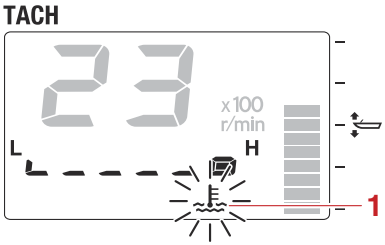

ZMU08416

1. Overheat-alert indicator

Stop the engine immediately if the buzzer sounds and the overheat device has activated. Check the cooling water inlet for clogging.

ECM01594

NOTICE

- **Do not continue to run the engine if the overheat-alert indicator blinks. Serious engine damage will occur.**
- **Do not continue to operate the engine if an alert device has activated. Consult your Yamaha dealer if the problem cannot be located and corrected.**

Low oil pressure-alert indicator

If the engine oil pressure drops too low, the low oil pressure-alert indicator will start to blink, and the engine speed will automatically decrease to about 2000–3500 r/min.

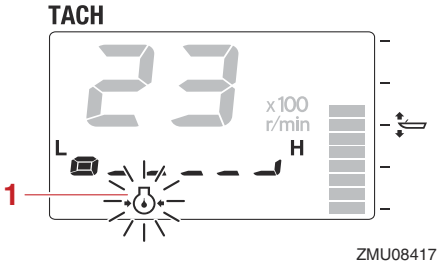

1. Low oil pressure-alert indicator

Stop the engine immediately if the buzzer sounds and the low oil pressure-alert indicator blinks. Check the engine oil level and replenish oil if necessary. If the alert device has activated while the appropriate engine oil level is maintained, consult your Yamaha dealer.

ECM01602

NOTICE

Do not continue to run the engine if the low oil pressure alert device has activated. Serious engine damage will occur.

EMU26807

Alert system

ECM00093

NOTICE

Do not continue to operate the engine if an alert device has activated. Consult your Yamaha dealer if the problem cannot be located and corrected.

EMU35188

Digital electronic control alert

If during operation of the outboard motor any communication troubles between the digital electronic control and the outboard motor occur, the DEC alert indicator will change from blue to orange. Even if there is no symptom of trouble with shifting or throttle, get back to port soon and have a Yamaha dealer inspect or repair the outboard motor.

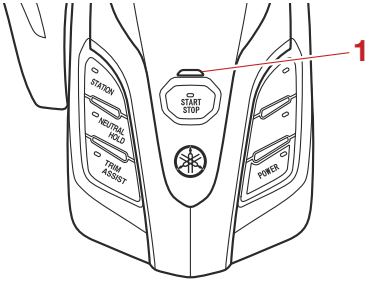

1. DEC alert indicator

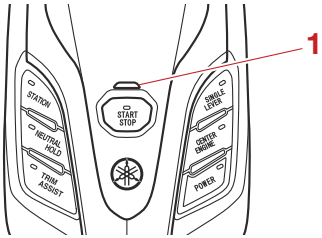

1. DEC alert indicator

EMU47384

Overheat alert

This outboard motor has an overheat alert system. If the engine temperature rises too high, the alert system will activate.

- The engine speed will automatically decrease to about 2000–3500 r/min.
- The overheat-alert indicator will come on or blink.

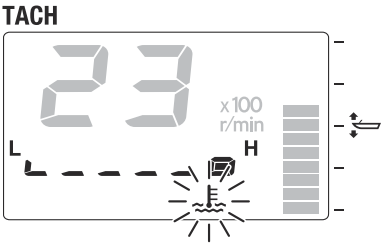

ZMU05422

- The pop-up window will appear on the Multi-Display.

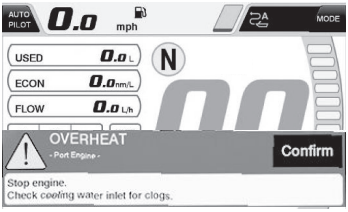

- The buzzer will sound. (The device that produces the sound may be different depending on the equipment installed on the boat.)

Illustration showing an example of the possible buzzer location

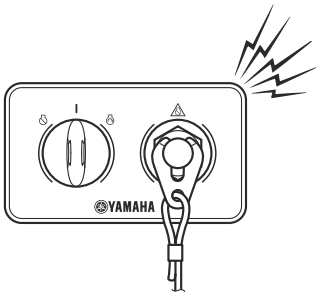

If the alert system has activated, stop the engine and check the cooling water inlets.

- Check the trim angle to be sure that the cooling water inlets are submerged.

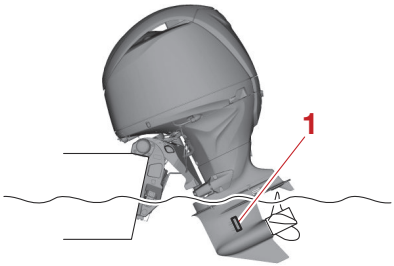

1. Cooling water inlet

- Check the cooling water inlets for clogging.

Multiple-engine users

If the overheat alert system of one outboard motor activates, the engine will slow down.

<u>To turn off the alert activation on the outboard motors not affected by overheating</u>

(1) Stop the overheated engine.

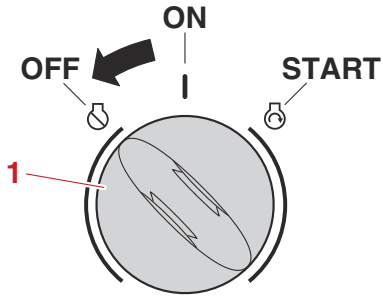

1. Main switch

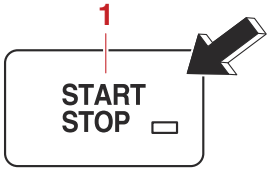

1. “START/STOP” switch

TIP:
If the alert system has activated, stop the engine and tilt the outboard motor up to check the cooling water inlets for clogging.

(2) If the alert system is still activated, tilt the overheated outboard motor up and return to port.

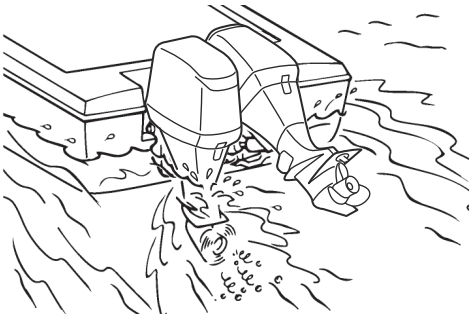

EMU47395

Low oil pressure alert

If the oil pressure drops too low, the alert system will activate.

- The engine speed will automatically decrease to about 2000–3500 r/min.
- The low oil pressure-alert indicator will come on or blink.

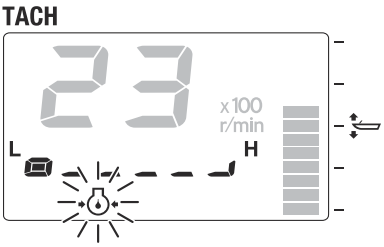

ZMU05431

- The pop-up window will appear on the Multi-Display.

- The buzzer will sound. (The device that produces the sound may be different depending on the equipment installed on the boat.)

Illustration showing an example of the possible buzzer location

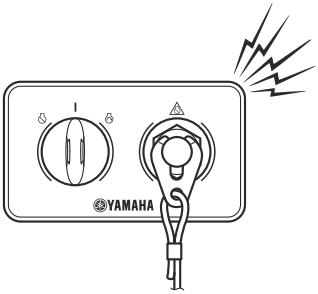

TIP:
If the alert system has activated, stop the engine as soon as it is safe to do so. Check the oil level and add oil as needed. If the oil level is correct and the alert system does not turn off, consult your Yamaha dealer.

Multiple-engine users
If the low oil pressure alert system of one outboard motor activates, all of the engines will slow down and the buzzer will sound.

To turn off the alert activation on the outboard motors not affected by the low oil pressure
Stop the engine that has the low oil pressure.

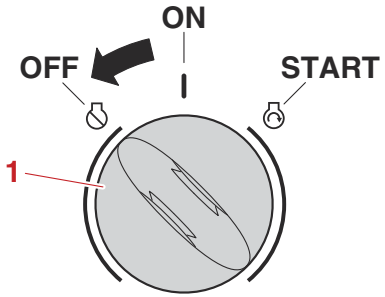

1. Main switch

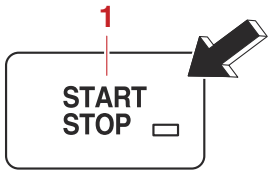

1. “START/STOP” switch

EMU47403

Water separator alert

The outboard motor is equipped with a water separator alert system. If water separated from the fuel exceeds a specific volume, the alert system will activate.

- The water separator-alert indicator will come on or blink.

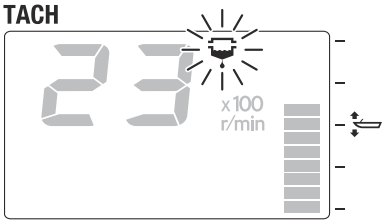

ZMU05424

- The pop-up window will appear on the Multi-Display.

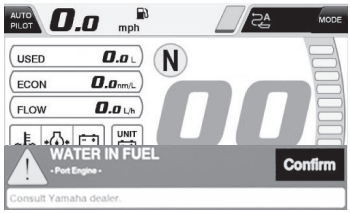

- The buzzer will sound intermittently when the control lever is in the neutral position.

If the alert system has activated
Stop the engine and see page 114 of this manual to drain the water from the fuel filter. Return to port and consult a Yamaha dealer immediately.

ECM02471

NOTICE

Although the buzzer will stop when the engine is started and the control lever is

moved to the forward or reverse position, do not use the outboard motor. Otherwise, serious engine damage could occur.

EMU26903

Installation

The information presented in this section is intended as reference only. It is not possible to provide complete instructions for every possible boat and motor combination. Proper mounting depends in part on experience and the specific boat and motor combination.

EWM01591

WARNING

- **Overpowering a boat could cause severe instability. Do not install an outboard motor with more horsepower than the maximum rating on the capacity plate of the boat. If the boat does not have a capacity plate, consult the boat manufacturer.**
- **Improper mounting of the outboard motor could result in hazardous conditions such as poor handling, loss of control, or fire hazards. For permanently mounted models, your dealer or other person experienced in proper rigging should mount the motor.**

EMU33483

Mounting the outboard motor

The outboard motor should be mounted so that the boat is well balanced. Otherwise, the boat could be hard to steer. For single-engine boats, mount the outboard motor on the centerline (keel line) of the boat.

For twin engine boats, mount the outboard motors equidistant from the centerline.

Consult your Yamaha dealer or boat manufacturer for further information on determining the proper mounting location.

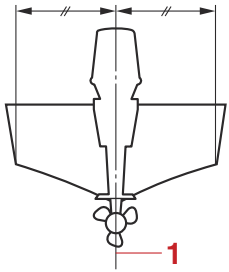

1. Center line (keel line)

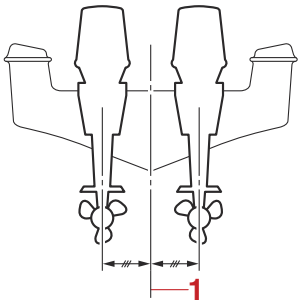

1. Center line (keel line)

EMU26937

Mounting height (boat bottom)

The mounting height of your outboard motor affects its efficiency and reliability. If it is mounted too high, propeller ventilation may occur, which will reduce propulsion due to excessive propeller slip, and the water intakes for the cooling system may not get an adequate water supply, which can cause engine overheating. If the engine is mounted too low, water resistance (drag) will increase, thereby reducing engine efficiency and performance.

Most commonly, an outboard motor should be mounted so that the anti-cavitation plate is in alignment with the bottom of the boat. The optimum mounting height of the outboard motor is affected by the boat/motor

combination and the desired use. Test runs at different heights can help determine the optimum mounting height. Consult your Yamaha dealer or boat manufacturer for further information on determining the proper mounting height.

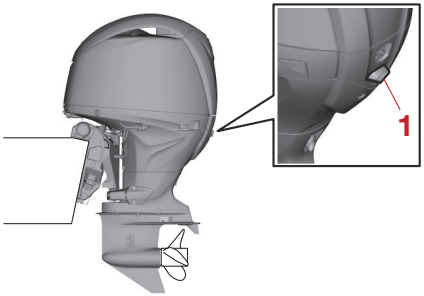

1. Idle hole

ECM01635

NOTICE

- **Make sure that the idle hole is high enough to prevent water from entering the engine even if the boat is stationary with the maximum load.**
- **Incorrect engine height or obstructions to the smooth flow of water (such as the design or condition of the boat, or accessories, such as transom ladders or depth finder transducers) can create airborne water spray while the boat is cruising. If the outboard motor is operated continuously in the presence of airborne water spray, enough water could enter the engine through the air intake opening in the top cowling to cause severe engine damage. Remove the cause of the airborne water spray.**

EMU36382

First-time operation

EMU40512

Filling engine oil

The outboard motor is shipped from the factory without engine oil. If your Yamaha dealer did not fill the engine with engine oil, you must fill the engine before starting it. ***NOTICE:*** **Make sure that the engine is filled with engine oil before operating the outboard motor for the first time. Otherwise, the engine could be damaged severely.** [ECM02241]

The following tag, which is fitted on the outboard motor when it is shipped from the factory, should be removed after the engine is filled with engine oil for the first time. For more information on checking the engine oil level, see page 57.

EMU30175

Breaking in engine

Your new engine requires a period of break-in to allow mating surfaces of moving parts to wear in evenly. Correct break-in will help ensure proper performance and longer engine life. ***NOTICE:*** **Failure to follow the break-in procedure could result in reduced engine life or even severe engine damage.** [ECM00802]

EMU41223

Procedure for breaking in engine

Your new engine requires a period of 10 hours break-in so that mating surfaces of moving parts wear in evenly.

Operate the engine in the water under load (in gear with a propeller installed) for 10 hours as follows. When breaking in the engine, avoid extended idling, rough water, and crowded areas.

(1) For the 1st hour of operation:
Operate the engine at varying speeds up to 2000 r/min or approximately 1/2 throttle.

(2) For the 2nd hour of operation:
Increase the engine speed until the boat is on plane (but avoid full-throttle operation), and then back off on the throttle while keeping the boat at a planing speed.

(3) For the remaining 8 hours of operation:
Operate the engine at any speed. However, avoid operating at full throttle for more than 5 minutes at a time.

(4) After the 1st 10 hours of operation:
Operate the engine normally.

EMU36402

Getting to know your boat

All boats have unique handling characteristics. Operate cautiously while you learn how

your boat handles under different conditions and various trim angles (see page 74).

EMU36414

Checks before starting engine

EWM01922

WARNING

If any item in "Checks before starting engine" is not working properly, have it inspected and repaired before operating the outboard motor. Otherwise, an accident could occur.

ECM00121

NOTICE

Do not start the engine out of water. Overheating and serious engine damage can occur.

EMU36422

Fuel level

Be sure you have plenty of fuel for your trip. A good rule is to use 1/3 of your fuel to get to the destination, 1/3 to return, and to keep 1/3 as an emergency reserve. With the boat level on a trailer or in the water, turn the key to "ON" (on) and check the fuel level. For fuel filling instructions, see page 60.

EMU40774

Removing top cowling

For the following checks, remove the top cowling from the bottom cowling.

To remove the top cowling, pull the cowling lock levers and lift up the top cowling.

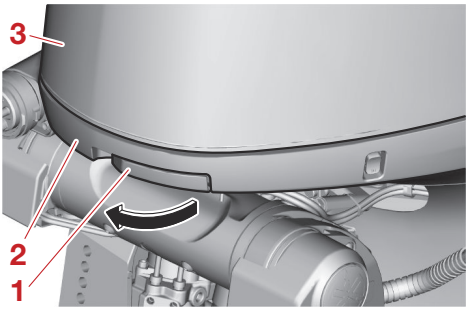

1. Cowling lock lever
2. Bottom cowling
3. Top cowling

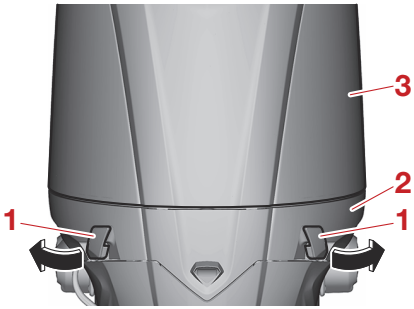

1. Cowling lock lever
2. Bottom cowling
3. Top cowling

EMU36443

Fuel system

EWM00061

WARNING

Gasoline and its vapors are highly flammable and explosive. Keep away from sparks, cigarettes, flames, or other sources of ignition.

EWM00911

WARNING

Leaking fuel can result in fire or explosion.

- **Check for fuel leakage regularly.**
- **If any fuel leakage is found, the fuel system must be repaired by a qualified mechanic. Improper repairs can make the outboard unsafe to operate.**

EMU36453

Check for fuel leaks

- Check for fuel leaks or gasoline fumes in the boat.
- Check for fuel leakage from the fuel system.
- Check the fuel tank and fuel lines for cracks, swellings, or other damage.

EMU37323

Checking the fuel filter

Check that the fuel filter is clean and free of water. If any water is found in the fuel, or if a significant amount of debris is found, the fuel tank should be checked and cleaned by a Yamaha dealer.

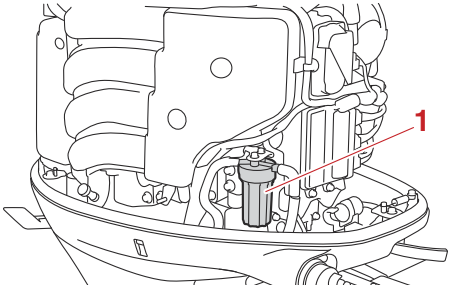

1. Fuel filter

EMU47813

Controls

(1) Make sure that when the main switch is turned "**ON**" (on) or the "POWER" switch is pressed, the DEC alert indicator will come on in blue.

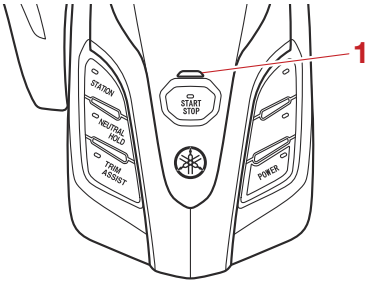

1. DEC alert indicator

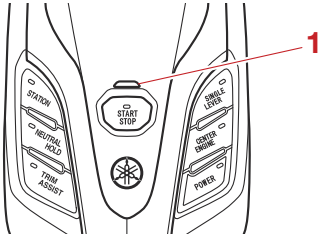

1. DEC alert indicator

(2) Turn the steering wheel fully to the left and right and make sure that the outboard motor moves to port and starboard smoothly.
(3) Operate the remote control levers several times to make sure there is no hesitation in their travel.

EMU40363

Engine shut-off cord (lanyard)

Check the engine shut-off cord and clip for damage, such as cuts, breaks, and wear.

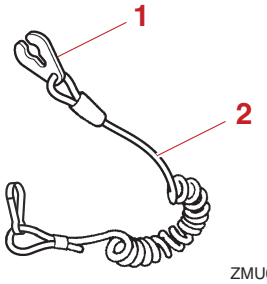

1. Clip
2. Engine shut-off cord (lanyard)

EMU40995

Engine oil

(1) Place the outboard motor in a vertical position (not tilted). ***NOTICE:*** **If the outboard motor is not level, the oil level indicated on the oil dipstick may not be accurate.** [ECM01862]

(2) Remove the oil dipstick and wipe it clean.

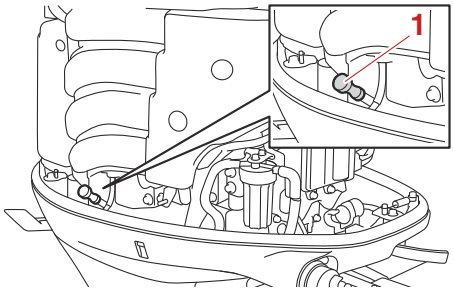

1. Oil dipstick

(3) Insert the oil dipstick completely and remove it again.

(4) Check that the oil level on the oil dipstick is between the upper and lower marks. Consult your Yamaha dealer if the oil level is not at the proper level or if it appears milky or dirty.

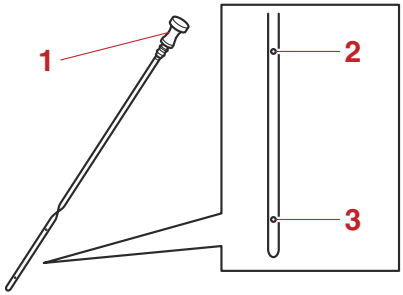

1. Oil dipstick
2. Upper mark
3. Lower mark

EMU40412

Outboard motor

- Check that the outboard motor is mounted properly and check the outboard motor mounting bolts for looseness.
- Check the propeller for damage.
- Check for engine oil leaks.

EMU36494

Flushing device

Check that the flushing device's garden hose connector is securely screwed on to the fitting on the bottom cowling. ***NOTICE:*** **If the garden hose connector is not properly connected, cooling water can leak out and the engine can overheat during operation.** [ECM01802]

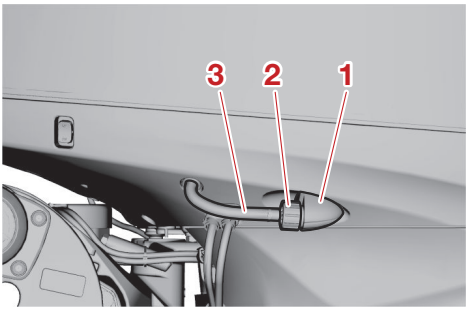

1. Fitting
2. Garden hose connector
3. Flushing device

EMU40753

Installing top cowling

(1) Check the rubber seal for damage. If the rubber seal is damaged, have it replaced by a Yamaha dealer.

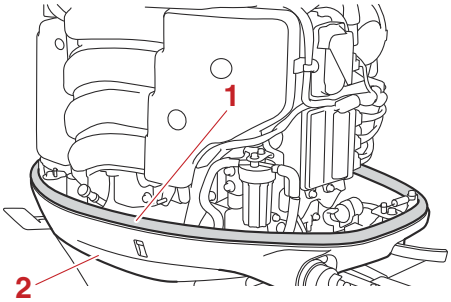

1. Rubber seal
2. Bottom cowling

(2) Check that the rubber seal is seated all the way around the bottom cowling.
(3) Check that all of the cowling lock levers are pulled outward.
(4) Align the 3 protrusions on the top cowling with the corresponding holders on the bottom cowling, and then place the top cowling on the bottom cowling.

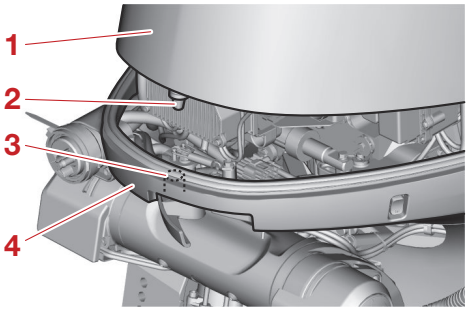

1. Top cowling
2. Protrusion
3. Holder
4. Bottom cowling

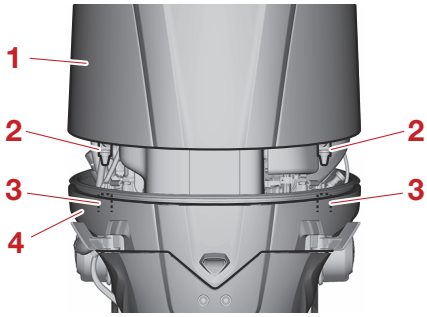

1. Top cowling
2. Protrusion
3. Holder
4. Bottom cowling

(5) Push the cowling lock levers inward to secure the top cowling.

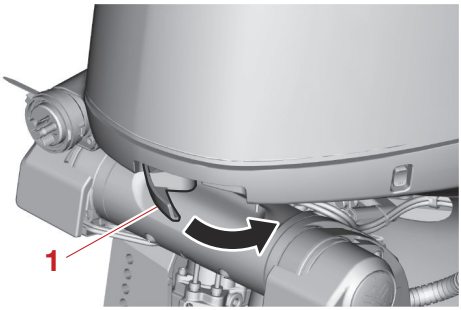

1. Cowling lock lever

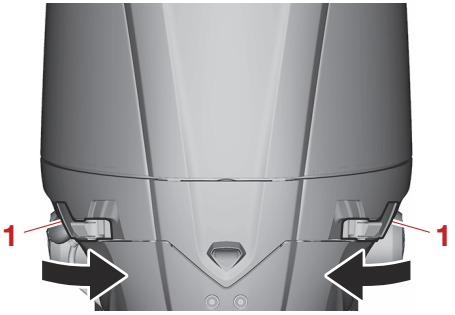

1. Cowling lock lever

(6) Check the fitting of the top cowling by pushing it with both hands. ***NOTICE:*** **If the top cowling is not installed correctly, water can enter the top cowling and damage the engine, or the top cowling can blow off at high speeds.**

[ECM02371]

EMU34582

Power trim and tilt system

EWM01931

WARNING

- **Never get under the lower unit while it is tilted, even when the tilt support lever is locked. Severe injury could occur if the outboard motor accidentally falls.**
- **Body parts can be crushed between the motor and the clamp bracket when the motor is trimmed or tilted.**
- **Be sure no one is near the outboard motor before performing this check.**

(1) Check the power trim and tilt unit for any sign of oil leaks.

(2) Operate each of the power trim and tilt switches to check that all switches work.

(3) Tilt the outboard motor up and check that the trim and tilt rod is pushed out completely.

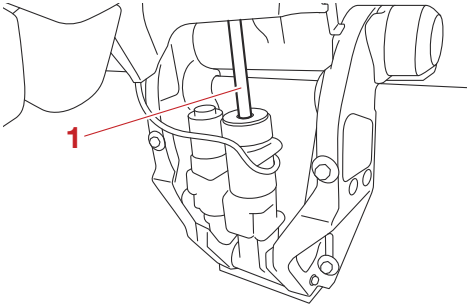

1. Trim and tilt rod

(4) Check that the trim and tilt rod is free of corrosion or other flaws.

(5) Tilt the outboard motor down. Check that the trim and tilt rod operates smoothly.

EMU36585

Battery

Check the battery's charge. If your boat is equipped with a Yamaha digital speedometer, the voltmeter and low battery alert functions will help you monitor the battery's charge. A battery in good condition will provide a minimum of 12 volts. Check that the battery connections are clean, secure and covered by insulating covers. The electrical connections of the battery and cables must be clean and properly connected or the battery will not start the engine.

If the battery needs charging, consult your Yamaha dealer or the battery manufacturer's instructions.

EMU30028

Filling fuel

EWM01831

WARNING

- **Gasoline and its vapors are highly flammable and explosive. Always refuel according to this procedure to reduce the risk of fire and explosion.**
- **Gasoline is poisonous and can cause injury or death. Handle gasoline with care. Never siphon gasoline by mouth. If you should swallow some gasoline or inhale a lot of gasoline vapor, or get some gasoline in your eyes, see your doctor immediately. If gasoline spills on your skin, wash with soap and water. If gasoline spills on your clothing, change your clothes.**

Before refueling, check the following points:

- Ensure the engine is stopped.
- Securely moor the boat in a well-ventilated area and stop the engine. If the boat is trailered, make sure that it is stable.
- Make sure that no one is in the boat.
- Do not smoke and keep away from sparks, flames, static electric discharge, or other sources of ignition.
- If you use a portable container to store and dispense fuel, only use a locally approved GASOLINE container.
- To prevent electrostatic sparks, discharge any built-up static electricity from your body before refueling.

(1) Remove the fuel tank cap.
(2) Fill the fuel tank with fuel. **WARNING! Do not overfill. Otherwise fuel can expand and overflow if the temperature increases.** [EWM02611]
(3) Tighten the fuel tank cap securely.
(4) Wipe up any spilled gasoline immediately with dry rags. Dispose of rags properly according to local laws or regulations.

EMU40252

Operating engine

EWM02601

WARNING

This product emits exhaust gases which contain carbon monoxide, a colorless, odorless gas which could cause brain damage or death when inhaled. Symptoms include nausea, dizziness, and drowsiness. Keep cockpit and cabin areas well ventilated. Avoid blocking exhaust outlets.

EMU31814

Sending fuel

(1) If there is a fuel joint or a fuel valve on the boat, firmly connect the fuel line to the joint or open the fuel valve.
(2) Squeeze the primer pump, with the arrow pointing up, until you feel it become firm.

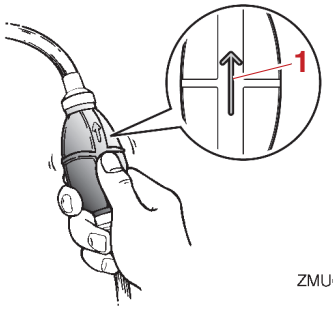

1. Arrow

EMU27497

Starting engine

EWM01601

WARNING

Before starting the engine, make sure that the boat is tightly moored and that you can steer clear of any obstructions. Be sure there are no swimmers in the water near you.

EMU41792

Start-up checks

Place the control lever in neutral and turn the main switch to "ON" (on) or turn the "POWER" switch on. If the buzzer sounds and the water separator-alert indicator blinks, consult a Yamaha dealer immediately.

EMU49631

Procedure for starting engine

EWM01842

WARNING

- **Failure to attach the engine shut-off cord could result in a runaway boat if operator is ejected. Attach the engine shut-off cord to a secure place on your clothing, or your arm or leg while operating. Do not attach the cord to clothing that could tear loose. Do not route the cord where it could become entangled, preventing it from functioning.**
- **Avoid accidentally pulling the cord during normal operation. Loss of engine power means the loss of most steering control. Also, without engine power, the boat could slow rapidly. This could cause people and objects in the boat to be thrown forward.**

[1] Unlocking the outboard motor (EKS or Y-COP equipped models)

How to unlock (Pattern 1)

(1) Place the key fob at the console area.
(2) The key fob will be recognized by the system, and then the system will be unlocked.

How to unlock (Pattern 2)

(1) Hold the key fob within 5 m of the "POWER" panel.
(2) Press the Unlock button on the key fob. The beep will sound twice, and the lock indicator will turn off.

	Beeps	Engine can be started	Lock indicator
Lock	●	NO	Turns on
Unlock	●●	YES	Turns off

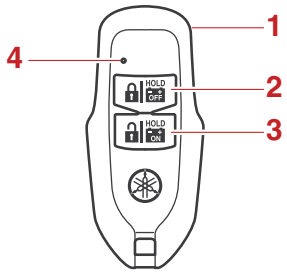

1. Key fob
2. Lock button
3. Unlock button
4. LED

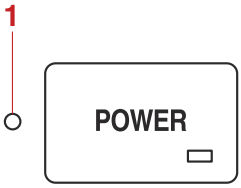

1. Lock indicator

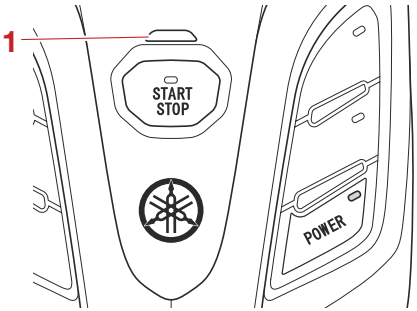

1. Lock indicator

[2] Safety check

TIP:

In case of dual stations, check and attach the safety devices in the station where you wish to operate the outboard motors. However, the “POWER” switches in the second station do not function. Please do the procedure of powering on/off in the main station.

(1) Place the control lever in “**N**” (neutral).

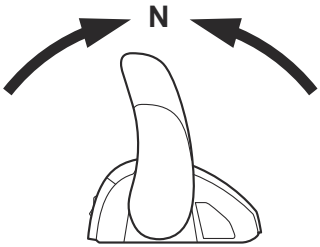

TIP:

The start-in-gear protection device prevents the engine from starting except when in neutral.

(2) Attach the engine shut-off cord to a secure place on your clothing, or your arm or leg. Then install the clip on the other end of the cord into the engine shut-off switch.

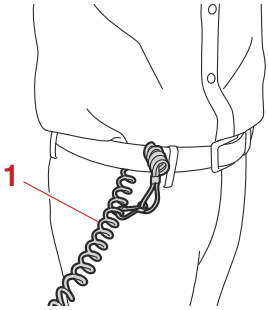

1. Engine shut-off cord (lanyard)

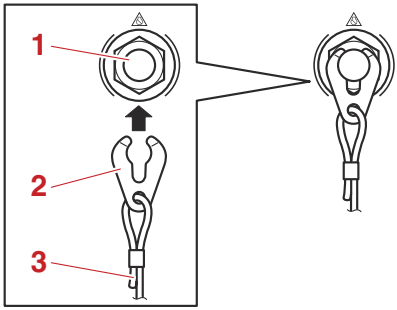

1. Engine shut-off switch
2. Clip
3. Engine shut-off cord (lanyard)

[3] Powering on the system

How to power on (Pattern 1 / EKS)

(1) Press the “POWER” switch on the switch panel or remote control. The beep will sound once, and the LED will come on.

	Beeps
Recognition succeeded	●
Recognition failed	More than ●●

On the remote control

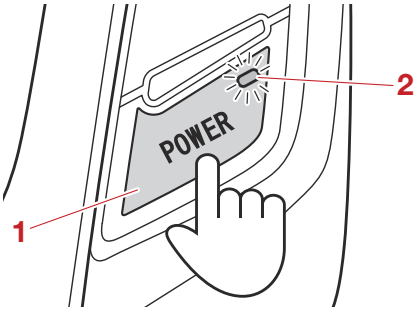

1. “POWER” switch
2. LED

On the switch panel

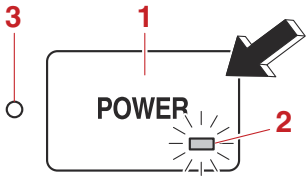

1. “POWER” switch
2. LED
3. Lock indicator

TIP:

- If you push the “POWER” switch, and the beep sounds more than twice, request an inspection and repairs at a Yamaha dealer.
- In case of dual stations, the “POWER” switches in the second station do not function. Please perform the procedure of powering on/off in the main station.

(2) Make sure that the DEC alert indicator comes on in blue. The engine cannot be started if the DEC alert indicator comes on in orange.

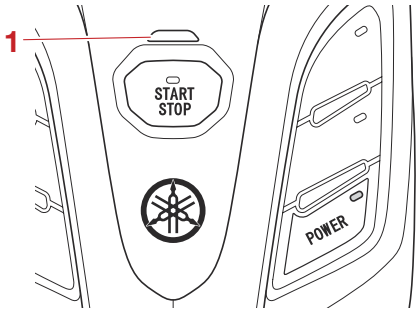

1. DEC alert indicator

How to power on (Pattern 2 / 6X6 switches)

(1) Turn the main switch to "ON" (on).

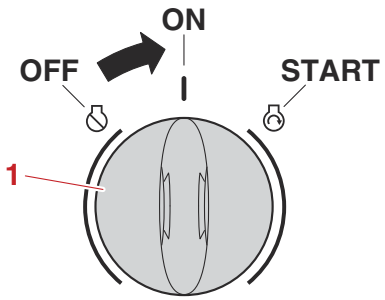

1. Main switch

(2) Make sure that the DEC alert indicator comes on in blue. The engine cannot be started if the DEC alert indicator comes on in orange.

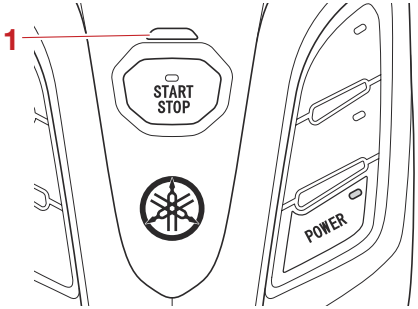

1. DEC alert indicator

[4] Station selection (in case of dual stations)

(1) Put the remote control levers in both of the main station helm and the 2nd station helm in the "N" (neutral) position.

(2) Press the "STATION" switch you want to enable, and the LED turns on.

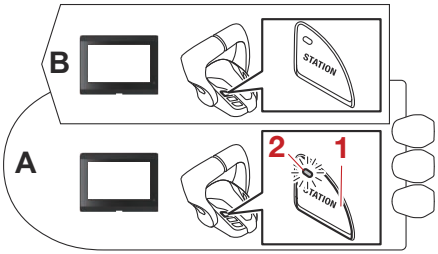

1. "STATION" switch
2. LED

TIP:

- In the illustration above, the switches in the station A are enabled.
- The disabled station can only start and stop the engine. It cannot operate the digital electronic control.
- The "POWER" switches in the second station do not function. Please perform the procedure of powering on/off in the main station.
- The LED on the "STATION" switch flashes 3 times if the station selection failed.

[5] Starting the engine

TIP:

The LEDs on the switch panels and the remote control are mutually related.

- If all the engines have been started, the LEDs on the all start/stop switch panel, on the remote control, and other switch panels will turn on relatedly.
- If the engines have been started individually, the LEDs on the all start/stop switch panel and remote control will not turn on unless all the engines have been completely started.

Starting the all engines (Pattern 1 / EKS)
Press the “START/STOP” switch on the remote control or the all start/stop switch panel to start the all engines. The LED will come on.

On the remote control

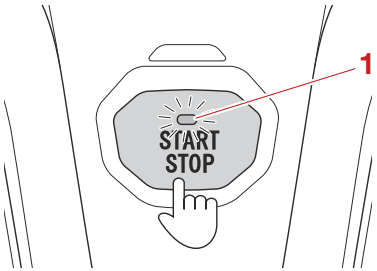

1. LED

On the all start/stop switch panel

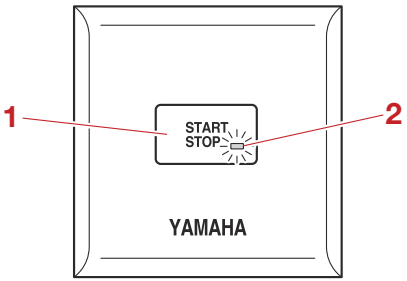

1. “START/STOP” switch
2. LED

Starting the individual engines (Pattern 2 / EKS)
Press the “START/STOP” switch to start the engine you wish to start individually. The LED or indicator for the started engine will come on.

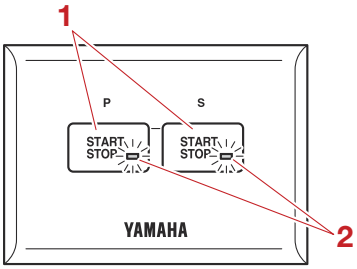

1. “START/STOP” switch
2. LED

Starting the all engines (Pattern 3 / 6X6 switches)
Press the “START/STOP” switch on the all start/stop switch panel to start the all engines.

On the all start/stop switch panel

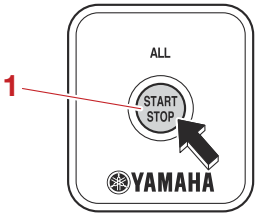

1. “START/STOP” switch

Starting the individual engines (Pattern 4 / 6X6 switches)
Press the “START/STOP” switch to start the engine. The LED or indicator for the started engine will come on.

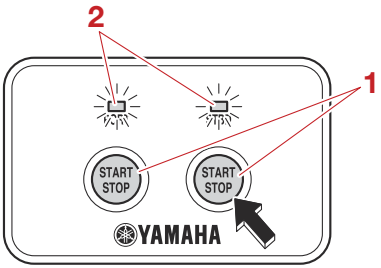

1. “START/STOP” switch
2. Indicator

Starting the single engine (Pattern 5 / 6X6 switches)

(1) Turn the main switch to “START” (start), and hold it for a maximum of 5 seconds.
NOTICE: **Never turn the main switch to “START” (start) while the engine is running. Do not keep the starter motor turning for more than 5 seconds. If the starter motor is turned continuously for more than 5 seconds, the battery will be quickly discharged, thus making it impossible to start the engine. The starter can also be damaged. If the engine will not start after 5 seconds of cranking, return the main switch to “ON” (on), wait 10 seconds, then crank the engine again.**

[ECM00193]

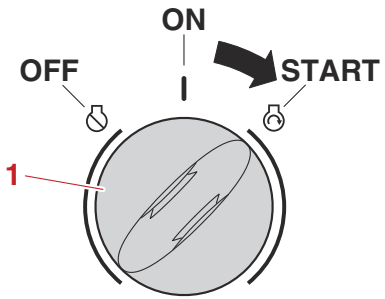

1. Main switch

(2) If the engine started correctly, return the main switch to “ON” (on) position.

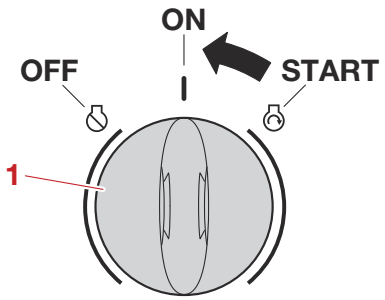

1. Main switch

EMU36511

Checks after starting engine

EMU41361

Cooling water

Check for a steady flow of water from the cooling water pilot hole. A continuous flow of water from the cooling water pilot hole shows that the water pump is pumping water through the cooling water passages.

TIP:

When the engine is started, there may be a slight delay before water flows from the cooling water pilot hole.

ECM02251

NOTICE

If water is not flowing out of the cooling water pilot hole at all times while the engine is running, overheating and serious damage could occur. Stop the engine and check whether the cooling water inlet on the lower case or the cooling water pilot hole is blocked. Consult your Yamaha dealer if the problem cannot be located and corrected.

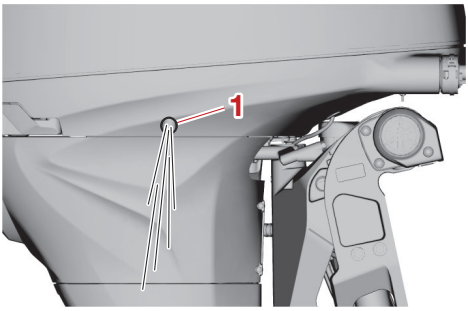

1. Cooling water pilot hole

EMU27671

Warming up engine

EMU47821

Procedure for warming up engine

After the engine has started, warm up the engine until the engine speed settles at idling speed.

The engine warm-up indicator "" appears while the engine is being warmed up and goes off when warming-up is finished.

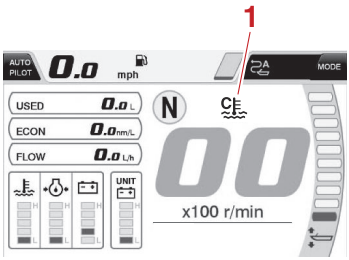

1. Engine warm-up indicator

EMU36532

Checks after engine warm up

EMU36542

Shifting

While the boat is tightly moored, and without applying throttle, confirm that the engine shifts smoothly into forward and reverse, and back to neutral.

EMU41821

Stop switches

Perform the following procedure to check that the main switch and engine shut-off switch operate properly.

- Check that the engine stops when the main switch is turned to the "**OFF**" (off) position, or press the Start/Stop button.
- Check that the engine stops when the clip is pulled from the engine shut-off switch.
- Check that the engine cannot be started with the clip removed from the engine shut-off switch.

EMU35127

Shifting

EWM00181

WARNING

Before shifting, make sure there are no swimmers or obstacles in the water near you.

Warm up the engine before shifting into gear. Until the engine is warm, the idle speed may be higher than normal. The control lever of the Digital electronic control can be operated even at high engine speeds. However, gear shifting will not work until the engine speed has automatically decreased to a speed at which actual gear shifting is possible. As a result, for quick gear shifting there could be a time lag when the gear is shifted until the engine speed has decreased sufficiently.

To shift out of neutral

(1) Pull the neutral interlock trigger up (if equipped).

(2) Move the remote control lever to the forward position or reverse position 22.5° (a detent can be felt).

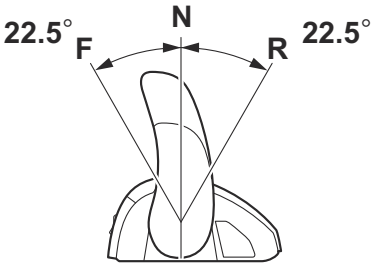

To shift from in gear (forward/reverse) to neutral

(1) Close the throttle so that the engine slows to idle speed.

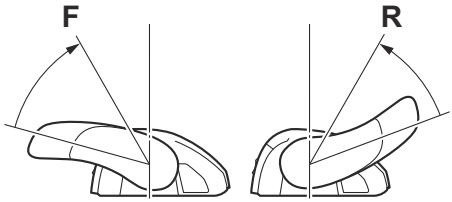

(2) After the engine is at idle speed in gear, move the remote control lever to the neutral position.

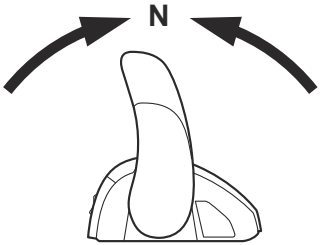

EMU48702

Neutral hold switch operation

To set

(1) Place the control lever in "**N**" (neutral).

(2) When the "NEUTRAL HOLD" switch is pressed, a beep will sound and the LED will come on.

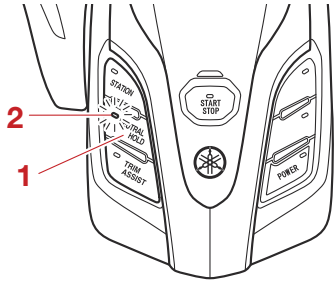

1. “NEUTRAL HOLD” switch
2. LED

(3) You can open or close the throttle. This can also be done when the control lever is set in reverse.

To release

(1) Place the control lever in “**N**” (neutral).
(2) When the “NEUTRAL HOLD” switch is pressed, a beep will sound and the LED will go off.
(3) You can perform normal forward or reverse operation

EMU48720

Single lever switch operation

TIP:

- When the single lever switch is activated, the starboard control lever is inoperable. You must start all the engines to enable the single lever switch.

To set

(1) Place the control lever in “**N**” (neutral).
(2) When the “SINGLE LEVER” switch is pressed, a beep will sound and the LED will come on.

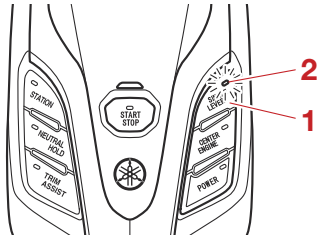

1. “SINGLE LEVER” switch
2. LED

(3) The port side control lever will allow you to perform shift and throttle operations for all outboard motors that have been started.

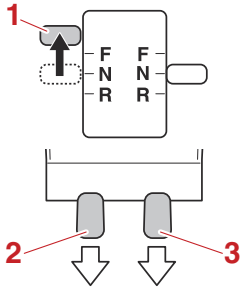

1. Port side control lever
2. Port side engine
3. Starboard side engine

To release

(1) Place the control lever in “**N**” (neutral).
(2) When the “SINGLE LEVER” switch is pressed, a beep will sound and the LED will go off.
(3) You can perform normal shift or throttle operations.

EMU31743

Stopping boat

EWM01511

WARNING

- **Do not use the reverse function to slow down or stop the boat as it could cause you to lose control, be ejected, or impact the steering wheel or other parts of the boat. This could increase the risk of serious injury. It could also damage the shift mechanism.**
- **Do not shift into reverse while traveling at planing speeds. Loss of control, boat swamping, or damage to the boat could occur.**

The boat is not equipped with a separate braking system. Water resistance stops it after the throttle lever is moved back to idle. The stopping distance varies depending on gross weight, water surface conditions, and wind direction.

EMU27824

Stopping engine

Before stopping the engine, first let it cool off for a few minutes at idle or low speed. Stopping the engine immediately after operating at high speed is not recommended.

EMU49642

Procedure for stopping engine

[1] Neutral check

Place the control lever in "**N**" (neutral).

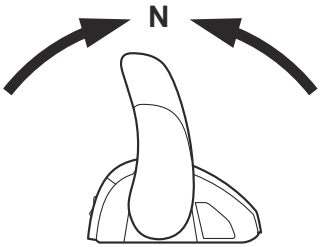

[2] Stopping the engine

TIP:

The LEDs on the switch panels and the remote control are mutually related.

- If some of the engines still remain on, the LEDs on the all start/stop switch panel and the remote control will also remain on.
- If all the engines have completely been stopped, all the LEDs will also turn off relatedly.

Stopping the all engines (Pattern 1)

Press the "START/STOP" switch on the remote control or the all start/stop switch panel to stop the all engines. The LED or indicator (if equipped) will go off.

On the remote control

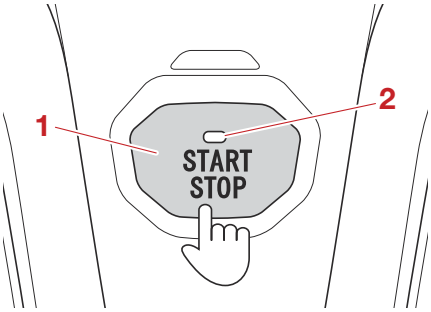

1. "START/STOP" switch
2. LED

On the all start/stop switch panel (EKS)

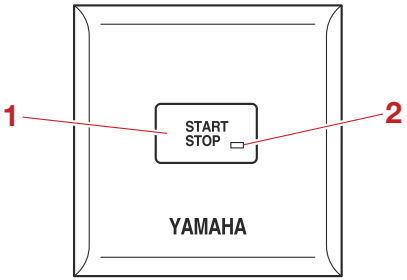

1. “START/STOP” switch
2. LED

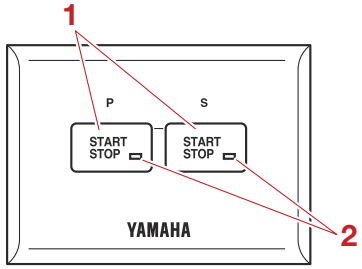

1. “START/STOP” switch
2. LED

On the all start/stop switch panel (6X6)

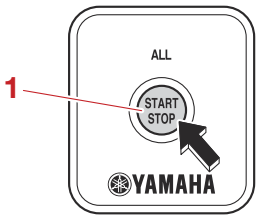

1. “START/STOP” switch

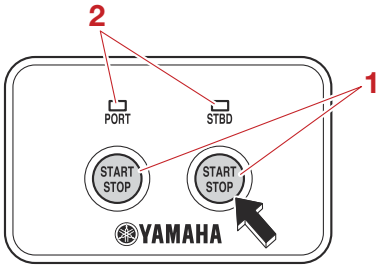

1. “START/STOP” switch
2. Indicator

Stopping the individual engines (Pattern 2)

Press the “START/STOP” switch to stop the engine you wish to stop individually. The LED or indicator for the stopped engine will go off.

Stopping the single engine (Pattern 3 / 6X6 switches)

Turn the main switch to “**OFF**” (off).

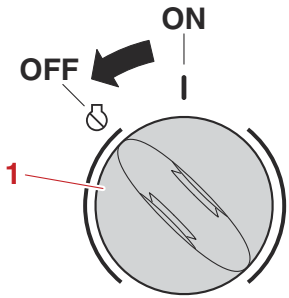

1. Main switch

TIP:
The engine can also be stopped by pulling the cord and removing the clip from the engine shut-off switch, then turning the main switch to "**OFF**" (off).

[3] Powering off the system

TIP:
In case of dual stations, the "POWER" switches in the second station do not function. Please perform the procedure of powering on/off in the main station.
Press the "POWER" switch, or turn the main switch to "**OFF**" (off) to turn off the power. The LED or indicator will turn off.

On the remote control

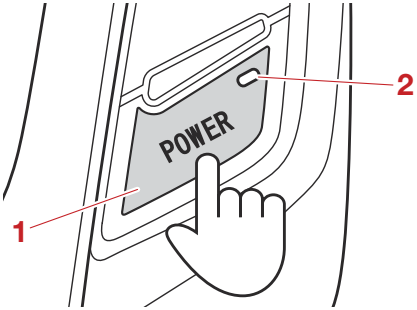

1. "POWER" switch
2. LED

On the switch panel

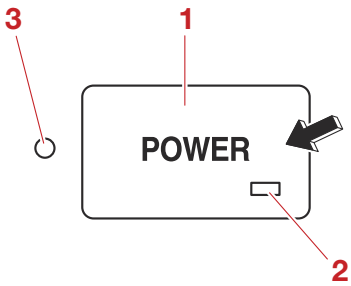

1. "POWER" switch
2. LED
3. Lock indicator

On the main switch

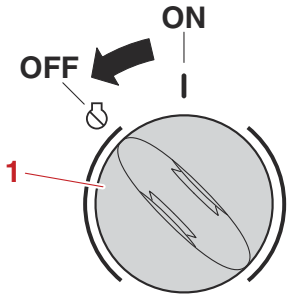

1. Main switch

[4] Locking the outboard motor

How to lock (Pattern 1 / EKS or Y-COP equipped models)

(1) (In case of 6X6 switches) If the start/stop button was pressed to stop the engine in the step before, and the main switch is still in the "**ON**" (on) position, make sure to turn the main switch to "**OFF**" (off).

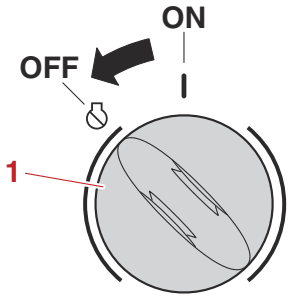

1. Main switch

(2) Hold the key fob within 5 m of the "POWER" panel.
(3) Press the lock button on the key fob.

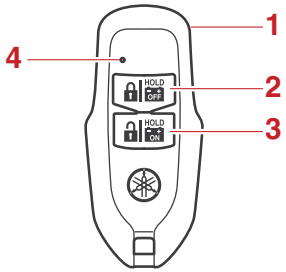

1. Key fob
2. Lock button
3. Unlock button
4. LED

	Beeps	Engine can be started	Lock indicator
Lock	●	NO	Turns on
Unlock	●●	YES	Turns off

(4) The beep will sound once, the lock indicator turns on, and then the system locks.

On the switch panel

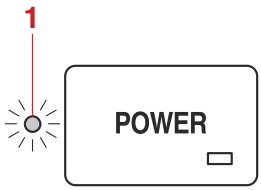

1. Lock indicator

On the remote control

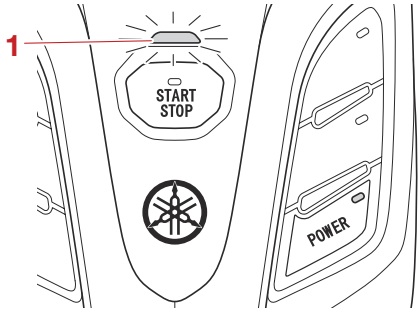

1. Lock indicator

(5) Remove the keys (if remained), if the boat will be left unattended.

How to lock (Pattern 2 / 6X6 switches)

(1) If the start/stop button was pressed to stop the engine in the step before, and the main switch is still in the "**ON**" (on) position, make sure to turn the main switch to "**OFF**" (off).

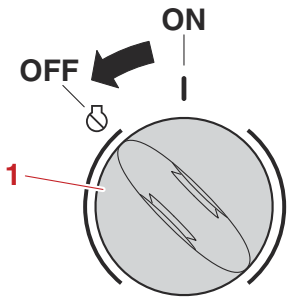

1. Main switch

(2) Remove the keys, if the boat will be left unattended.

EMU27865

Trimming outboard motor

EWM00741

WARNING

Excessive trim for the operating conditions (either trim up or trim down) can cause boat instability and can make steering the boat more difficult. This increases the possibility of an accident. If the boat begins to feel unstable or is hard to steer, slow down and/or readjust the trim angle.

The trim angle of the outboard motor helps determine the position of the bow of the boat in the water. Correct trim angle will help improve performance and fuel economy while reducing strain on the engine. Correct trim angle depends upon the combination of boat, engine, and propeller. Correct trim is also affected by variables such as the load in the boat, sea conditions, and running speed.

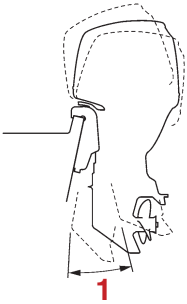

1. Trim operating angle

EMU27889

Adjusting trim angle (Power trim and tilt)

EWM00754

WARNING

- **Be sure all people are clear of the outboard motor when adjusting the trim angle. Body parts can be crushed between the motor and the clamp bracket when the motor is trimmed or tilted.**
- **Use caution when trying a trim position for the first time. Increase speed gradually and watch for any signs of instability or control problems. Improper trim angle can cause loss of control.**
- **If equipped with a power trim and tilt switch located on the bottom cowling, use the switch only when the boat is at a complete stop with the engine off. Do not adjust the trim angle with this switch while the boat is moving.**

Adjust the outboard motor trim angle using the power trim and tilt switch.

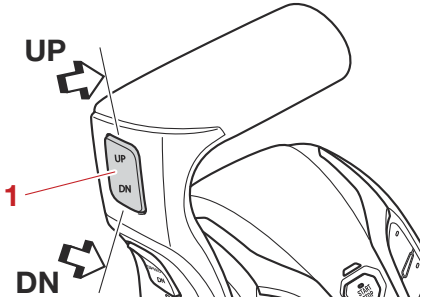

1. Power trim and tilt switch

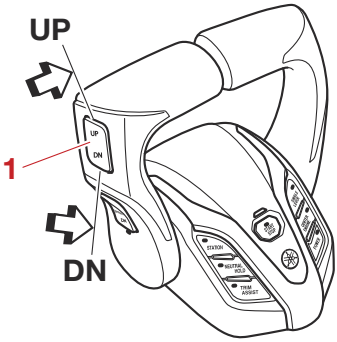

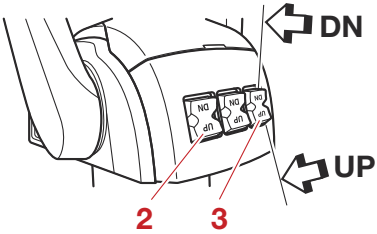

1. Power trim and tilt switch (all engines)
2. Power trim and tilt switch (starboard side engine)
3. Power trim and tilt switch (port side engine)

To raise the bow (trim-out), press the switch "**UP**" (up).
To lower the bow (trim-in), press the switch "**DN**" (down).
Make test runs with the trim set to different angles to find the position that works best for your boat and operating conditions.

EMU27913

Adjusting boat trim

When the boat is on plane, a bow-up attitude results in less drag, greater stability and efficiency. This is generally when the keel line of the boat is up about 3 to 5 degrees. With the bow up, the boat may have a greater tendency to steer to one side or the other. Compensate for this as you steer. When the bow of the boat is down, it is easier to accelerate from a standing start onto plane.

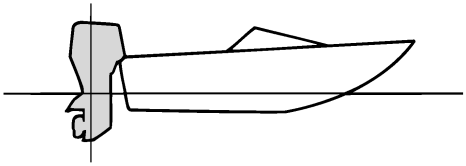

ZMU01784

Bow Up

Too much trim-out puts the bow of the boat too high in the water. Performance and economy are decreased because the hull of the boat is pushing the water and there is more air drag. Excessive trim-out can also cause the propeller to ventilate, which reduces performance further, and the boat may "porpoise" (hop in the water), which could throw the operator and passengers overboard.

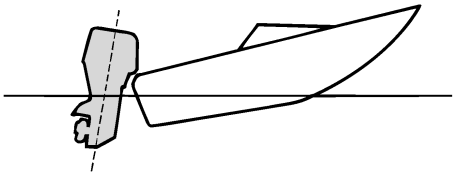

ZMU01785

Bow Down

Too much trim-in causes the boat to "plow" through the water, decreasing fuel economy and making it hard to increase speed. Operating with excessive trim-in at higher speeds also makes the boat unstable. Resistance at the bow is greatly increased, heightening the

danger of “bow steering” and making operation difficult and dangerous.

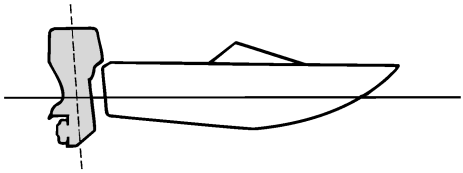

ZMU01786

TIP:
Depending on the type of boat, the outboard motor trim angle may have little effect on the trim of the boat when operating.

EMU48401

Tilting up and down

If the engine will be stopped for some time or if the boat is moored in shallows, the outboard motor should be tilted up to protect the propeller and lower case from damage by collision with obstructions, and also to reduce salt corrosion.

EWM01544

WARNING

Make sure that all people are clear of the outboard motor when tilting the outboard motor up and down. Body parts can be crushed between the outboard motor and the clamp bracket when the outboard motor is trimmed or tilted.

ECM00993

NOTICE

- **Before tilting the outboard motor, follow the procedure under “Stopping engine” in this chapter. Never tilt the outboard motor while the engine is running. Severe damage from overheating can result.**
- **To prevent the cooling water passages from becoming frozen when the ambient temperature is 5°C (41°F) or below, tilt the outboard motor up after it has been stopped 30 seconds or more.**

TIP:
When the PTT TotalTilt function is activated, you can tilt the outboard motor up/down automatically without keeping the PTT switch pressed. For further information, see page 78.

EMU49410

Procedure for tilting up (power trim and tilt models)

(1) Place the remote control lever in neutral.

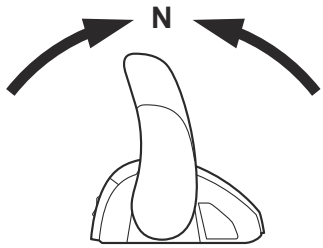

(2) Press the power trim and tilt switch “UP” (up) until the outboard motor has tilted up completely.

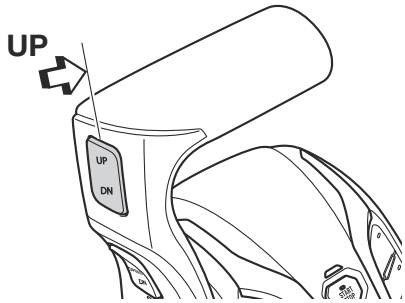

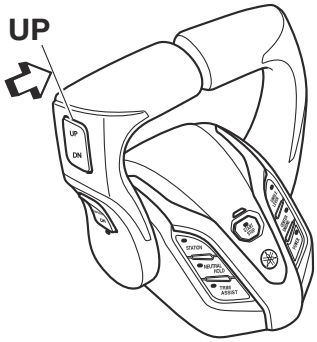

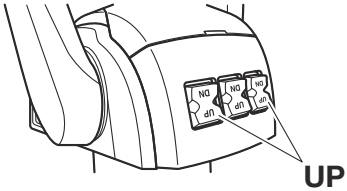

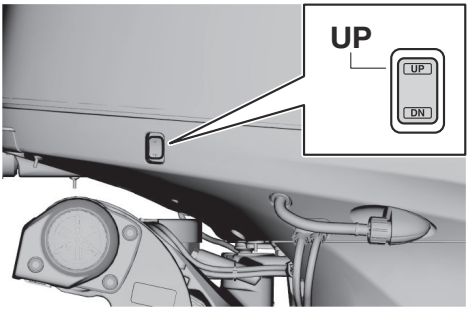

(3) Set the tilt support lever to support the engine. **WARNING! After tilting the outboard motor, be sure to support it with the tilt support knob or tilt support lever. Otherwise the outboard motor could fall back down suddenly if oil in the power trim and tilt unit or in the power tilt unit loses pressure.** [EWM00263] ***NOTICE:*** **Do not use the tilt support lever or knob when trailering the boat. The outboard motor could shake loose from the tilt support and fall. If the motor cannot be trailered in the normal running position, use an additional support device to secure it in the tilt position. For more detailed information, see page 83.** [ECM01642]

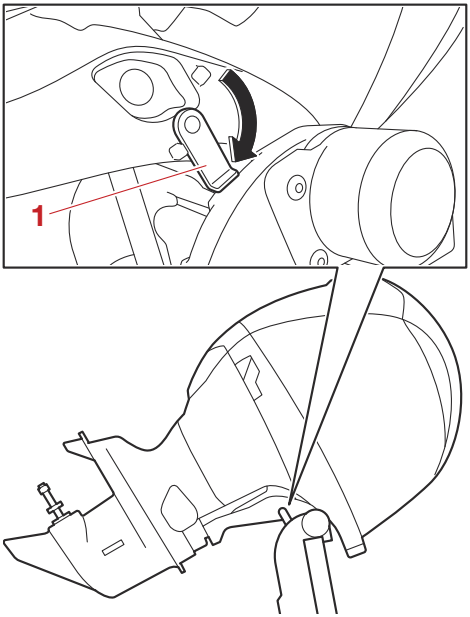

1. Tilt support lever

EMU42703

Procedure for tilting down

(1) Push the power trim and tilt switch "**UP**" (up) until the outboard motor is supported by the tilt rod and the tilt support lever becomes free.

(2) Release the tilt support lever.

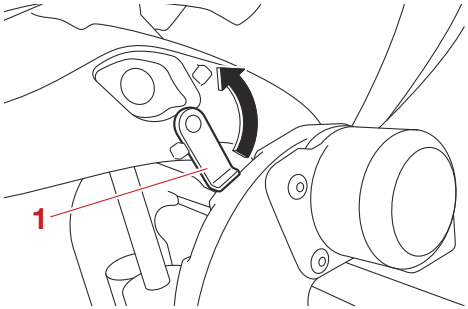

1. Tilt support lever

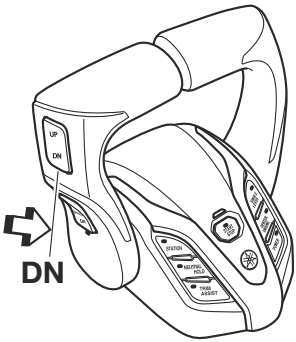

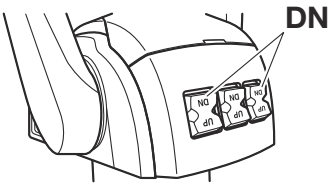

(3) Push the power trim and tilt switch "**DN**" (down) to lower the outboard motor to the desired position.

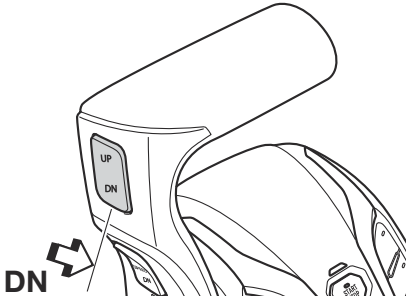

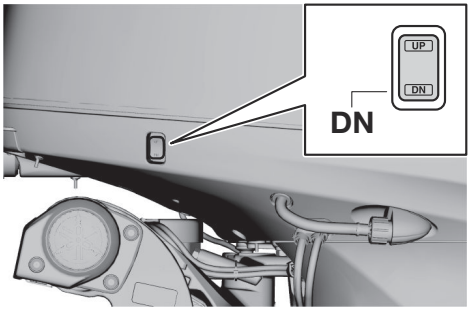

EMU48415

PTT TotalTilt™

This outboard motor is equipped with an automatic PTT tilt function. When this function is activated, you can tilt the outboard motor up/down automatically without keeping the PTT switch pushed.

TIP:

The PTT TotalTilt function is available only when the engine is stopped.

Activating and deactivating the PTT TotalTilt function

This function is deactivated by default. You can activate and deactivate it by yourself.

EWM01544

WARNING

Make sure that all people are clear of the outboard motor when tilting the outboard motor up and down. Body parts can be crushed between the outboard motor and the clamp bracket when the outboard motor is trimmed or tilted.

(1) Make sure that all the battery switches are turned on before operation.
(2) Fully tilt the outboard motor down.
(3) Remove the clip from the engine shut-off switch.

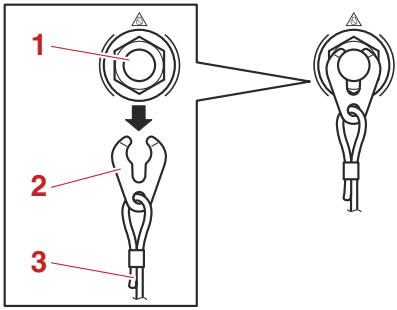

1. Engine shut-off switch
2. Clip
3. Engine shut-off cord (lanyard)

(4) Hold the "DN" (down) side of the PTT switch pushed.

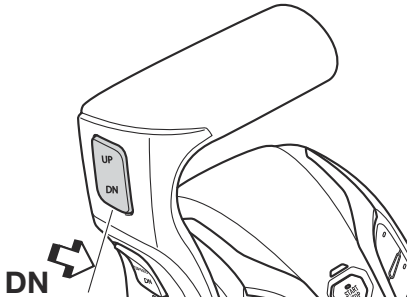

(5) Operate the trim zero set while keeping the "DN" (down) side of the PTT switch pushed.

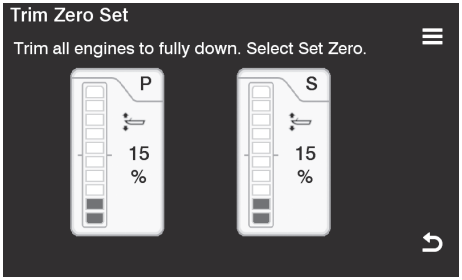

TIP:

- For how to operate the trim zero set, see the owner's manual included with the gauge.
- When the PTT TotalTilt function is activated, the buzzer will sound once.
- When the PTT TotalTilt function is deactivated, the buzzer will sound twice.

Automatic tilt-up

EWM01544

WARNING

Make sure that all people are clear of the outboard motor when tilting the outboard motor up and down. Body parts can be crushed between the outboard motor and the clamp bracket when the outboard motor is trimmed or tilted.

(1) Make sure that the PTT TotalTilt function is activated.
(2) Push the "**UP**" (up) side of the PTT switch twice quickly.

TIP:

- This operation causes the outboard motor to automatically tilt up to the fully tilted-up position and stop.
- If the tilt limiter is installed, the auto tilt up operation causes the outboard motor to automatically tilt up to the angle set by the tilt limiter and stop.
- The buzzer sounds before the automatic operation begins, and sounds intermittently during automatic tilting.
- Pushing the PTT switch briefly during the automatic operation, stops the operation.

Automatic tilt-down

EWM01544

WARNING

Make sure that all people are clear of the outboard motor when tilting the outboard motor up and down. Body parts can be crushed between the outboard motor and the clamp bracket when the outboard motor is trimmed or tilted.

(1) Make sure that the PTT TotalTilt function is activated.
(2) Push the "**DN**" (down) side of the PTT switch twice quickly.

TIP:

- This function causes the outboard motor to automatically tilt down to the fully trimmed-out position and stop.
- The buzzer sounds before the automatic operation begins, and sounds intermittently during automatic tilting.
- Pushing the PTT switch briefly during the automatic operation, stops the operation.

If automatic tilting does not operate

In the following situations, the PTT TotalTilt function is deactivated and does not operate. If you suspect a malfunction, consult your Yamaha dealer.

- The PTT unit is stuck, or foreign matter is preventing the tilting operation.
- The buzzer is malfunctioning.
- The tilt sensor is malfunctioning.

EMU28063

Shallow water

EMU40703

Cruising in shallow water

The outboard motor can be tilted up partially to allow operation in shallow water.

ECM00261

NOTICE

Do not tilt the outboard motor up so that the cooling water inlet on the lower unit is above the surface of the water when setting up for and cruising in shallow water. Otherwise severe damage from overheating can result.

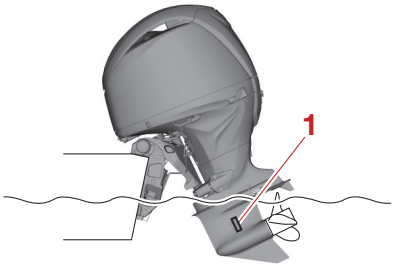

1. Cooling water inlet

EMU49352

Procedure for power trim and tilt models

(1) Place the remote control lever in neutral.

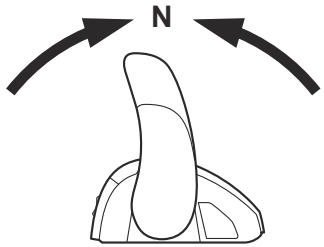

(2) Slightly tilt the outboard motor up to the desired position using the power trim and tilt switch. **WARNING! Using the power trim and tilt switch on the bottom cowling while the boat is moving or engine is on could increase the risk of falling overboard and could distract the operator, increasing the risk of collision with another boat or an obstacle.** [EWM01851]

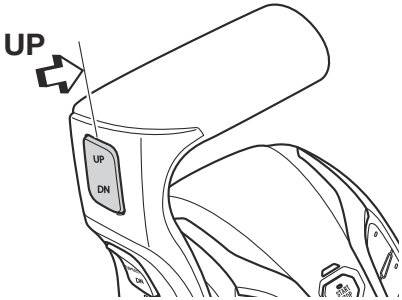

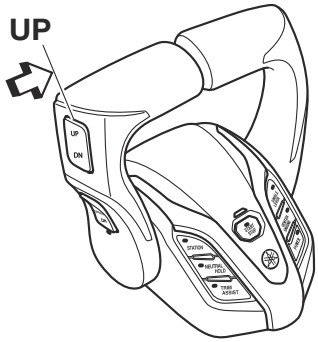

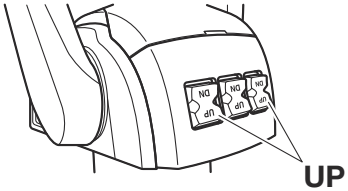

(3) To return the outboard motor to the normal running position, press the power trim and tilt switch and slowly tilt the outboard motor down.

EMU28196

Cruising in other conditions

Cruising in salt water

After operating in salt water, flush the cooling water passages with fresh water to prevent them from becoming clogged. Also rinse the outside of the outboard motor with fresh water.

Cruising in muddy, turbid, or acidic water

Yamaha strongly recommends that you use the optional chromium-plated water pump kit (see page 19) if you use the outboard motor in acidic water or water with a lot of sediment in it, such as muddy or turbid (cloudy) water. After operating in such water, flush the

cooling passages with fresh water to prevent corrosion. Also rinse the outside of the outboard motor with fresh water.

EMU31846

Transporting and storing outboard motor

EWM02641

WARNING

- **USE CARE when transporting fuel tank, whether in a boat or car.**
- **DO NOT fill fuel container to maximum capacity. Gasoline will expand considerably as it warms up and can build up pressure in the fuel container. This can cause fuel leakage and a potential fire hazard.**
- **Leaking fuel is a fire hazard. Tighten securely the fuel valve when transporting and storing the outboard motor.**
- **Never get under the outboard motor while it is tilted. Severe injury could occur if the outboard motor accidentally falls.**
- **Do not use the tilt support lever or knob when trailering the boat. The outboard motor could shake loose from the tilt support and fall. If the outboard motor cannot be trailered in the normal running position, use an additional support device to secure it in the tilt position.**

ECM02441

NOTICE

When storing the outboard motor for prolonged time, fuel must be drained from the fuel tank. The deteriorated fuel could clog the fuel line causing engine start difficulty or malfunction.

Leaking fuel is a fire hazard. When trailering the boat, close the fuel valve to prevent fuel from leaking.

When the outboard motor is tilted for a prolonged time for mooring or trailering the boat, make sure to follow the procedure listed below.

- Close the fuel valve.

The outboard motor should be transported and stored in the normal running position. If there is insufficient road clearance in this position, then trailer the outboard motor in the tilted position using a motor support device such as a transom saver bar. Consult your Yamaha dealer for further details.

EMU49380

Storing outboard motor

When storing your Yamaha outboard motor for prolonged periods of time (2 months or longer), several important procedures must be performed to prevent excessive damage. It is advisable to have your outboard motor serviced by an authorized Yamaha dealer prior to storage. However, you, the owner, with a minimum of tools, can perform the following procedures.

ECM01721

NOTICE

Store the outboard motor in a dry, well-ventilated place, not in direct sunlight.

Keep the outboard motor in the attitude shown when transporting and storing it.

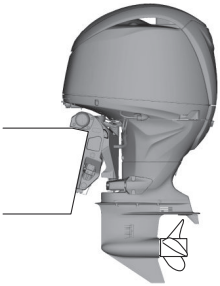

EMU28306

Procedure

EMU44324

Flushing with the flushing attachment

EWM00323

WARNING

You could be seriously injured if the engine accidentally starts when you are near the propeller.

- **Before inspecting, removing, or installing the propeller, remove the ignition coils from the spark plugs. Also, place the shift control in neutral, turn the main switch to "OFF" (off) and remove the key, and remove the clip from the engine shut-off switch. Turn off the battery cut-off switch if your boat has one.**
- **Do not use your hand to hold the propeller when loosening or tightening the propeller nut. Put a wood block between the anti-cavitation plate and the propeller to prevent the propeller from turning.**

Cooling system flushing is essential to prevent the cooling system from clogging up with salt, sand, or dirt. In addition, fogging/lubricating of the engine is mandatory to prevent excessive engine damage due to rust. Perform the flushing and fogging at the same time.

(1) If there is a fuel joint or a fuel valve on the boat, disconnect the fuel line from the joint or close the fuel valve.

(2) Wash the exterior of the outboard motor using fresh water. ***NOTICE:*** **Do not spray water into the air intake.** [ECM01841]
For further information, see page 86.

(3) Remove the top cowling and propeller.

(4) Install the flushing attachment over the cooling water inlet, and then turn on the water supply. ***NOTICE:*** **Do not run the engine without supplying it with cooling water. Either the engine water pump will be damaged or the engine will be damaged from overheating. Before starting the engine, be sure to supply water to the cooling water passages. Avoid running the outboard motor at high speed while on the flushing attachment, otherwise overheating could occur.** [ECM02001]

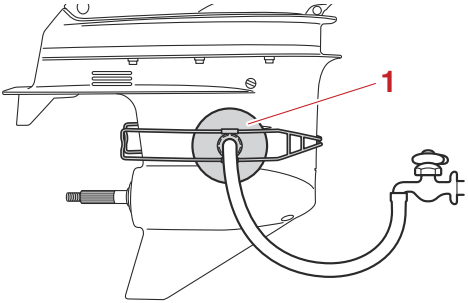

1. Flushing attachment

TIP:
A flushing attachment is available from your Yamaha dealer.

(5) Run the engine at a fast idle for a few minutes in neutral while supplying fresh water. **WARNING! Do not touch or remove electrical parts when starting or during operation. Keep hands, hair, and clothes away from the flywheel and other rotating parts while the engine is running.** [EWM00092] ***NOTICE:*** **Never turn the main switch to "START" (start) while the engine is running. Do not keep the starter motor turning for more than 5 seconds. If the starter motor is turned continuously for more than 5 seconds, the battery will be quickly discharged, thus making it impossible to start the engine. The**

starter can also be damaged. If the engine will not start after 5 seconds of cranking, return the main switch to "ON" (on), wait 10 seconds, then crank the engine again. [ECM00193]

TIP:

- When using the flushing attachment, maintain adequate water pressure so that there is a steady flow of water from the cooling water pilot hole.
- If the overheat alert device is activated, turn the engine off, and consult your Yamaha dealer.

(6) Just prior to turning off the engine, quickly spray fogging oil into the intake silencer. When properly done, the engine will smoke excessively and almost stall.

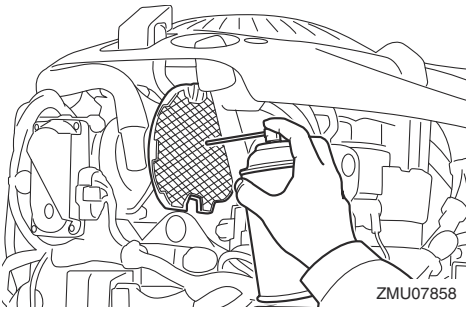

TIP:

If fogging oil is not available, consult your Yamaha dealer.

(7) Turn off the water supply, and then remove the flushing attachment and wipe off any excess water.
(8) Install the top cowling and propeller.
(9) Drain the cooling water completely out of the outboard motor. Clean the exterior of the outboard motor thoroughly.

EMU41072

Lubrication

(1) Change the gear oil. For instructions, see page 103. Check the gear oil for the presence of water that indicates a leaky seal. Seal replacement should be performed by an authorized Yamaha dealer prior to use.
(2) Lubricate all grease fittings. For further details, see page 92.

TIP:

For long-term storage, fogging the engine with fogging oil is recommended. Contact your Yamaha dealer for information about fogging oil and procedures for your outboard motor.

EMU40964

Flushing cooling water passage

Perform this procedure right after operation for the most thorough flushing.

ECM01531

NOTICE

Do not perform this procedure while the engine is running. The water pump may be damaged and severe damage from overheating can result.

(1) Disconnect the garden hose connector from the fitting on the bottom cowling.

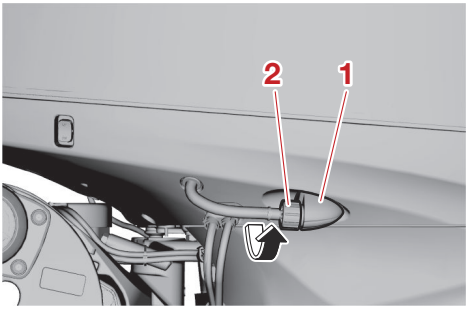

1. Fitting

2. Garden hose connector

(2) Connect the garden hose to the garden hose connector.

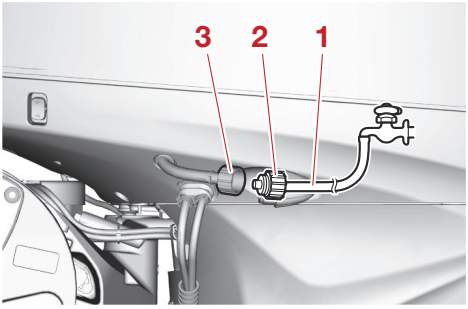

1. Garden hose
2. Garden hose adapter (commercially available)
3. Garden hose connector

(3) With the engine off, turn on the water supply and let the water flush through the cooling water passages for about 15 minutes.
(4) Turn off the water supply, and then disconnect the garden hose from the garden hose connector.
(5) Connect the garden hose connector to the fitting on the bottom cowling and tighten it securely. ***NOTICE:*** **If the garden hose connector is not properly connected, cooling water can leak out and the engine can overheat during operation.** [ECM01802]

TIP:
When flushing the cooling water passages with the boat in the water, tilting the outboard motor up until it is completely out of the water will achieve better results.

EMU44342
Cleaning the outboard motor
When cleaning the outboard motor, the top cowling must be installed.
(1) Wash the exterior of the outboard motor using fresh water. ***NOTICE:*** **Do not spray water into the air intake.** [ECM01841]

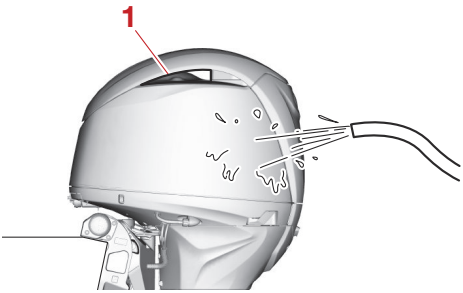

1. Air intake

(2) Drain the cooling water completely out of the outboard motor. Clean the body thoroughly.

EMU28463
Checking painted surface of outboard motor
Check the outboard motor for scratches, nicks, or flaking paint. Areas with damaged paint are more likely to corrode. If necessary, clean and paint the areas. Touch-up paint is available from your Yamaha dealer.

EMU2850F
Periodic maintenance
EWM01872
WARNING
These procedures require mechanical skills, tools, and supplies. If you do not have the proper skills, tools, or supplies to perform a maintenance procedure,

have a Yamaha dealer or other qualified mechanic do the work.
The procedures involve disassembling the motor and exposing dangerous parts. To reduce the risk of injury from moving, hot, or electrical parts:

- **Turn off the engine and keep the key(s) and engine shut-off cord (lanyard) with you when you perform maintenance unless otherwise specified.**
- **The power trim and tilt switches operate even when the ignition key is off. Keep people away from the switches whenever working around the motor. When the motor is tilted, keep away from the area under it or between it and the clamp bracket. Be sure no one is in this area before operating the power trim and tilt mechanism.**
- **Allow the engine to cool before handling hot parts or fluids.**
- **Always completely reassemble the motor before operation.**

Maintenance, replacement, or repair of the emission control devices and systems on models affixed with an emission control label may be performed by any marine engine repair establishment or individual. All warranty repairs, however, including those to the emission control system, must be performed by an authorized Yamaha marine dealership.

EMU28512

Replacement parts

If replacement parts are necessary, use only genuine Yamaha parts or parts of equivalent design and quality. Any part of inferior quality may malfunction, and the resulting loss of control could endanger the operator and passengers. Yamaha genuine parts and accessories are available from your Yamaha dealer.

EMU34152

Severe operating conditions

Severe operating conditions involve one or more of the following types of operation on a regular basis:

- Operating continuously at or near maximum engine speed (rpm) for many hours
- Operating continuously at a low engine speed (rpm) for many hours
- Operating without sufficient time for engine to warm up and cool down
- Frequent quick acceleration and deceleration
- Frequent shifting
- Frequently starting and stopping the engine(s)
- Operation that fluctuates often between light and heavy cargo loads

Outboard motors operating under any of these above conditions require more frequent maintenance. Yamaha recommends that you do this service twice as often as specified in the maintenance chart. For example, if a particular service should be done at 50 hours, do it instead at 25 hours. This will help prevent more rapid deterioration of engine components.

EMU46077

Maintenance chart 1

TIP:

- Refer to the sections in this chapter for explanations of each owner-specific action.
- The maintenance cycle on these charts assume usage of 100 hours per year and regular flushing of the cooling water passages. Maintenance frequency should be adjusted when operating the engine under adverse conditions such as extended trolling.
- Disassembly or repairs may be necessary depending on the outcome of maintenance checks.
- Expendable or consumable parts and lubricants will lose their effectiveness over time and through normal usage regardless of the warranty period.
- When operating in salt water, muddy, other turbid (cloudy), acidic water, the engine should be flushed with clean water after each use.

The "●" symbol indicates the check-ups which you may carry out yourself.

The "○" symbol indicates work to be carried out by your Yamaha dealer.

Item	Actions	Initial	Every			Page
		20 hours (3 months)	100 hours (1 year)	300 hours (3 years)	500 hours (5 years)	
Anode(s) (external)	Inspection or replacement as necessary		●/○			105
Anode(s) (internal) *1	Inspection or replacement as necessary		○			–
Anode(s) (internal) *2	Replacement				○	–
Battery (electrolyte level, terminal)	Inspection	●/○	●/○			105
Battery (electrolyte level, terminal)	Fill, charging or replacing as necessary		○			–
Cooling water leakage	Inspection or replacement as necessary	○	○			–
Cowling lock lever	Inspection		●/○			55, 58
Engine starting condition/noise	Inspection	●/○	●/○			60
Engine idle speed/ noise	Inspection	●/○	●/○			95
Engine oil	Replacement	●/○	●/○			95
Engine oil filter (cartridge)	Replacement		●/○			100

Item	Actions	Initial	Every			Page
		20 hours (3 months)	100 hours (1 year)	300 hours (3 years)	500 hours (5 years)	
Fuel filter (can be disassembled)	Inspection or replacement as necessary	●/○	●/○			56
Fuel line (High pressure)	Inspection	●	●			–
Fuel line (High pressure)	Inspection or replacement as necessary	○	○			–
Fuel line (Low pressure)	Inspection	●	●			–
Fuel line (Low pressure)	Inspection or replacement as necessary	○	○			–
Fuel pump	Inspection or replacement as necessary			○		–
Fuel/engine oil leakage	Inspection	○	○			–
Gear oil	Replacement	●/○	●/○			103
Greasing points	Greasing	●/○	●/○			92
Clamp bracket bolt (through tube)	Inspection and greasing		○			–
Impeller/water pump housing	Inspection or replacement as necessary		○			–
Impeller/water pump housing	Replacement			○		–
OCV (Oil Control Valve) filter (F200, LF200)	Replacement				○	–
Power trim and tilt unit	Inspection	●/○	●/○			59
Propeller/propeller nut/cotter pin	Inspection or replacement as necessary	●/○	●/○			102
PCV (Pressure Control Valve)	Inspection or replacement as necessary		○			–
Spark plug(s)	Inspection or replacement as necessary		●/○			94

Item	Actions	Initial	Every			Page
		20 hours (3 months)	100 hours (1 year)	300 hours (3 years)	500 hours (5 years)	
Ignition coils/ignition coil leads	Inspection or replacement as necessary	○	○			–
Shift Dampener System (SDS) propeller damper	Inspection or replacement		○			–
Water from the cooling water pilot hole	Inspection	●/○	●/○			66
Thermostat	Inspection or replacement as necessary		○			–
Timing belt	Inspection or replacement as necessary		○			–
Valve clearance	Inspection and adjustment				○	–
Cooling water inlet	Inspection	●/○	●/○			23
Main switch/stop switch	Inspection or replacement as necessary	○	○			–
Wire harness connections/wire coupler connections	Inspection or replacement as necessary	○	○			–
(Yamaha) Meter/gauge	Inspection	○	○			–
Electro-Hydraulic Steering system	Inspection or replacement as necessary	○	○	○	○	–
Throttle valve (ETV/Throttle body)	Inspection and cleaning		○			–

EMU46051

*1 exhaust cover
*2 crankcase cover, cooling water passage, exhaust cover

EMU46083

Maintenance chart 2

Item	Actions	Every	Page
		1000 hours	
Exhaust guide/ exhaust manifold	Inspection or replacement as necessary	○	—
Timing belt	Replacement	○	—
Anode(s) (internal) *1	Inspection or replacement as necessary	○	—
Electro-Hydraulic Steering system	Inspection or replacement as necessary	○	—

EMU49822

*1 cylinder head

EMU28946

Greasing

Yamalube grease A (water resistant grease)

Yamaha grease D (corrosion resistant grease; for propeller shaft)

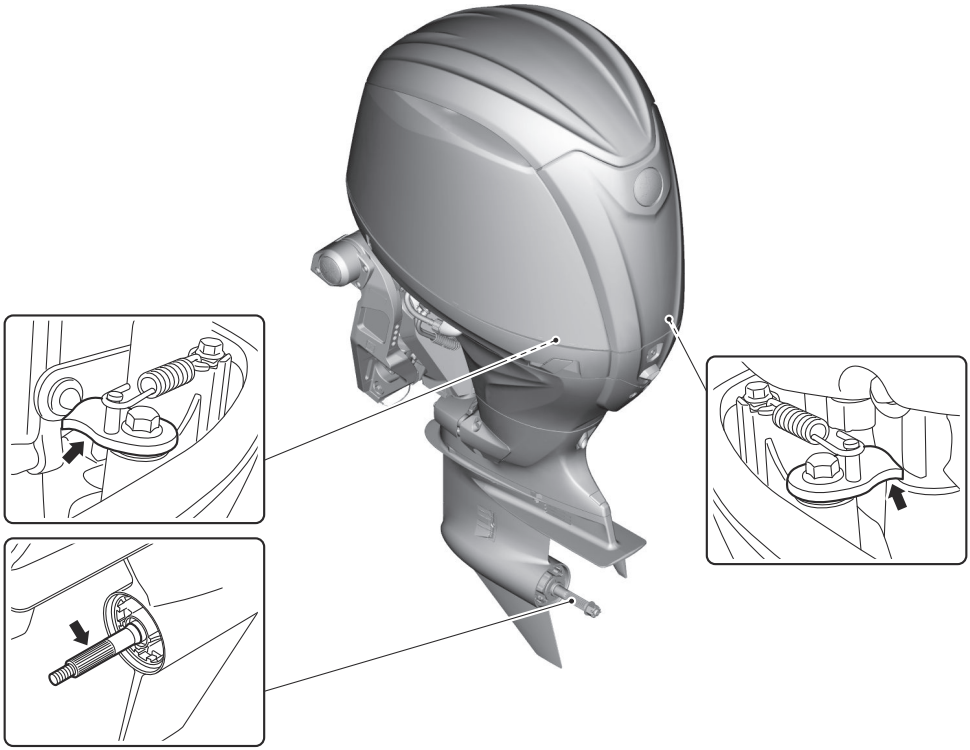

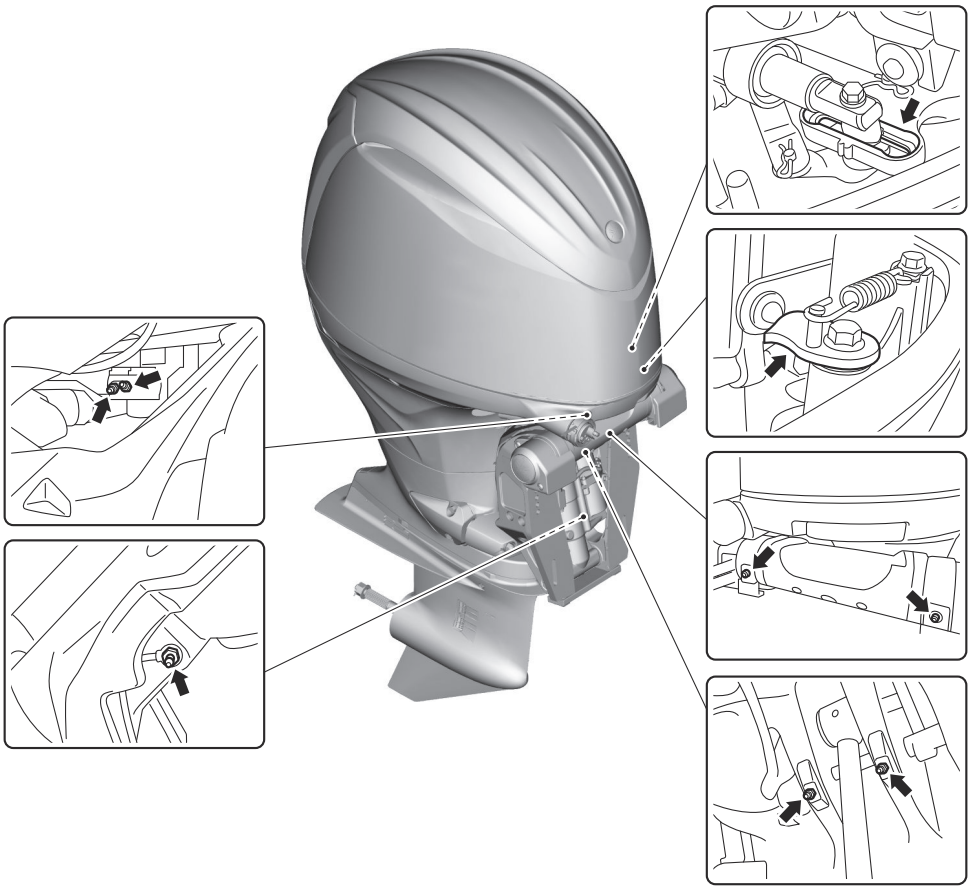

EMU44333

Inspecting spark plug

The spark plug is an important engine component. The condition of the spark plug can indicate something about the condition of the engine. For example, if the center electrode porcelain is very white, this could indicate an intake air leak or carburetion problem in that cylinder. Do not attempt to diagnose any problems yourself. Instead, take the outboard motor to a Yamaha dealer. You should periodically remove and check the spark plug because heat and deposits will cause the spark plug to slowly break down and erode.

To remove the spark plug

(1) Remove the ignition coil cover.

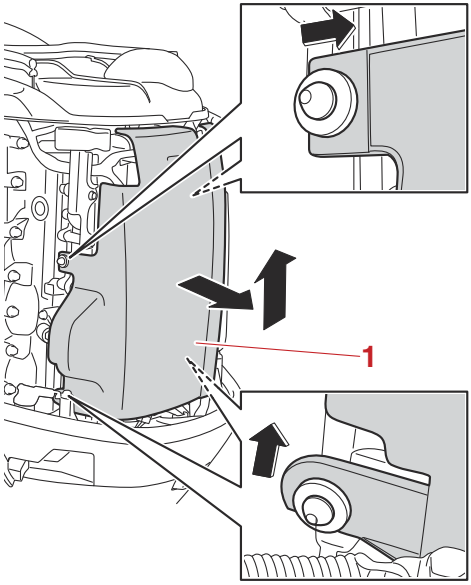

1. Ignition coil cover

(2) Remove the bolt that is securing the ignition coil, and then remove the ignition coil. ***NOTICE:*** **Do not use any tools to remove or install the ignition coil. Otherwise, the ignition coil coupler could be damaged.** [ECM02331]

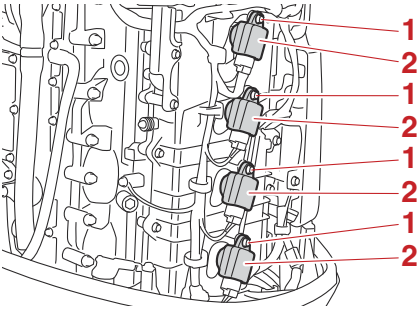

1. Bolt
2. Ignition coil

(3) Remove the spark plug. **WARNING! When removing or installing a spark plug, be careful not to damage the insulator. A damaged insulator could allow external sparks, which could lead to explosion or fire.** [EWM00562]

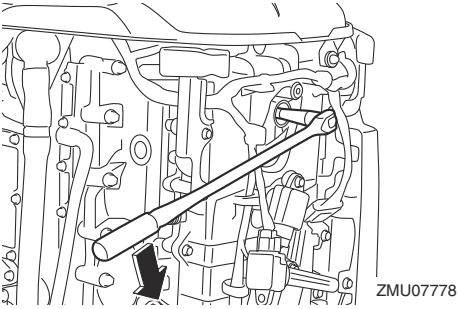

To check the spark plug

(1) Check the condition of the spark plug. If electrode erosion becomes excessive or carbon and other deposits are excessive, replace the spark plug with the specified plug.

Standard spark plug:
LFR6A-11

(2) Measure the spark plug gap using a thickness gauge. If the spark plug gap is out of specification, replace the spark plug with the specified plug.

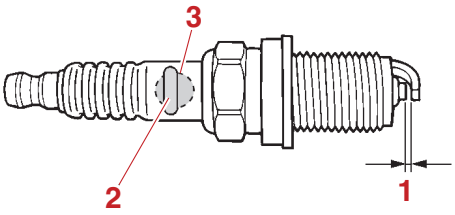

ZMU01797

1. Spark plug gap
2. Spark plug part number
3. Spark plug I.D. mark (NGK)

Spark plug gap:
1.0–1.1 mm (0.039–0.043 in)

To install the spark plug

(1) Wipe off any dirt from the threads, insulator, and gasket surface of the spark plug.
(2) Install the spark plug, and then tighten it to the specified torque.

Spark plug tightening torque:
28 N·m (2.8 kgf·m, 21 lb·ft)

TIP:
If a torque-wrench is not available when you are reinstalling a spark plug, a good estimate of the correct torque is 1/12 turn past finger-tight. When you are installing a new spark plug, a good estimate of the correct torque is 1/2 to 2/3 turn past finger-tight.

(3) Install the ignition coil, and then tighten the bolt to the specified torque.

Bolt tightening torque:
8 N·m (0.8 kgf·m, 5.9 lb·ft)

(4) Install the ignition coil cover.

EMU41872

Inspecting engine idle speed

ECM01691

NOTICE

This procedure must be performed while the outboard motor is in the water.

Inspect the engine idle speed using the meter that is equipped on the boat. Results may vary depending on whether testing is conducted with the outboard motor in the water.

(1) Start the engine and allow it to warm up fully in neutral until it is running smoothly.
(2) Inspect the engine idle speed. If the engine idle speed is out of specification, consult a Yamaha dealer or other qualified mechanic.

Idle speed (in neutral):
650–750 r/min

EMU44475

Changing engine oil

EWM00761

WARNING

- **Avoid draining the engine oil immediately after stopping the engine. The oil is hot and should be handled with care to avoid burns.**
- **Be sure the outboard motor is securely fastened to the transom or a stable stand.**

ECM01711

NOTICE

Change the engine oil after the first 20 hours of operation or 3 months, and every

100 hours or at 1-year intervals thereafter. Otherwise the engine will wear quickly.

To prevent spilling oil where it could cause damage to nature, it is strongly recommended that you use an oil changer to change the engine oil. If an oil changer is not available, drain the engine oil by removing the drain screw. If you are not familiar with the procedure for changing the engine oil, consult your Yamaha dealer.

Changing the engine oil using an oil changer (recommended)

(1) Put the outboard motor in an upright position (not tilted). ***NOTICE:*** **If the outboard motor is not level, the oil level indicated on the oil dipstick may not be accurate.** [ECM01862]

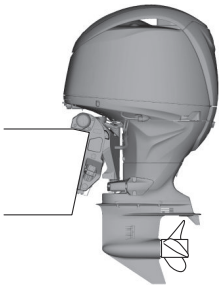

(2) Start the engine. Warm it up and keep the idle speed for 5-10 minutes.
(3) Stop the engine and leave it for 5-10 minutes.
(4) Remove the top cowling.
(5) Remove the oil filler cap.

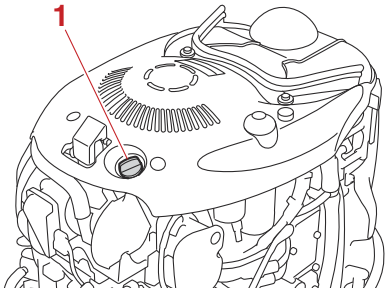

1. Oil filler cap

(6) Remove the oil dipstick.
(7) Insert the tube of the oil changer into the oil dipstick guide, and then extract the engine oil completely.

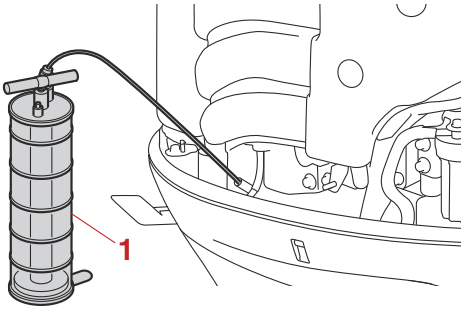

1. Oil changer

(8) Add the correct amount of oil through the filler hole. Put back the filler cap and the dipstick. ***NOTICE:*** **Overfilling the oil could cause leakage or damage. If the oil level is above the upper level mark, drain until the level meets the specified capacity.** [ECM01851]

Recommended engine oil:
YAMALUBE 4 or 4-stroke outboard motor oil
Engine oil quantity (without oil filter replacement):
4.3 L (4.55 US qt, 3.78 Imp.qt)
Engine oil quantity (with oil filter replacement):
4.5 L (4.76 US qt, 3.96 Imp.qt)

(9) Leave the outboard motor for 5-10 minutes.
(10) Remove the oil dipstick and wipe it clean.
(11) Insert the dipstick and remove it again. Be sure to completely insert the dipstick into the dipstick guide, otherwise the oil level measurement will be incorrect.
(12) Recheck the oil level using the dipstick to be sure the level falls between the upper and lower marks. Consult your Yamaha dealer if the oil level is out of specified level.

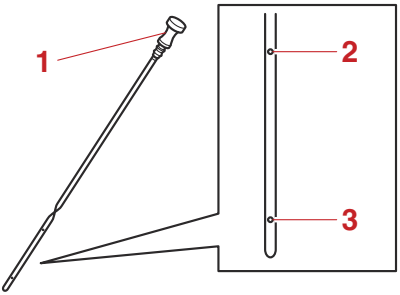

1. Oil dipstick
2. Upper mark
3. Lower mark

(13) Start the engine and make sure that the low oil pressure-alert indicator remains off. Also, make sure that there are no oil leaks. ***NOTICE:*** **If the low oil pressure-alert indicator comes on or if there are oil leaks, stop the engine and find the cause. Continued operation with a problem could cause severe engine damage. Consult your Yamaha dealer if the problem cannot be located and corrected.** [ECM01623]
(14) Install the top cowling.
(15) Dispose of used oil according to local regulations.

TIP:
- For more information on the disposal of used oil, consult your Yamaha dealer.
- Change the oil more often when operating the engine under adverse conditions such as extended trolling.

Changing the engine oil by draining the oil
The location of the drain screw is different for L transom models and X transom models. For L transom models, skip steps 5 and 14 because the apron does not have to be removed.

L transom models

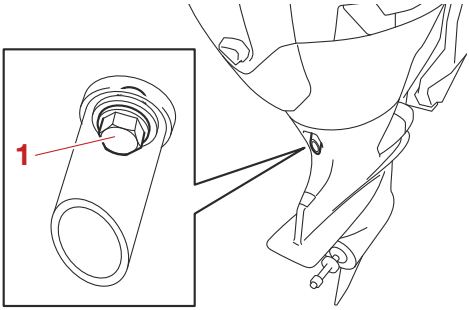

1. Drain screw

X transom models

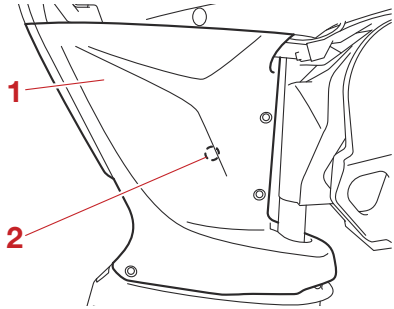

1. Apron
2. Drain screw

(1) Put the outboard motor in an upright position (not tilted). ***NOTICE:* If the outboard motor is not level, the oil level indicated on the oil dipstick may not be accurate.** [ECM01862]

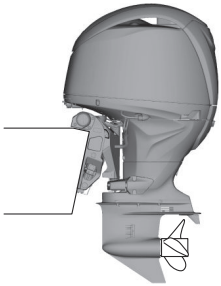

(2) Start the engine. Warm it up and keep the idle speed for 5-10 minutes.
(3) Stop the engine and leave it for 5-10 minutes.
(4) Remove the top cowling.
(5) Remove the bolts and screw to remove the apron from the starboard side.

X transom models

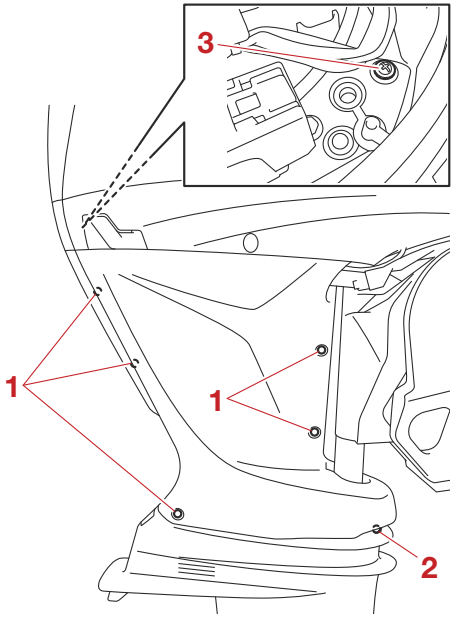

1. Bolt
2. Bolt
3. Screw

(6) Remove the oil filler cap.

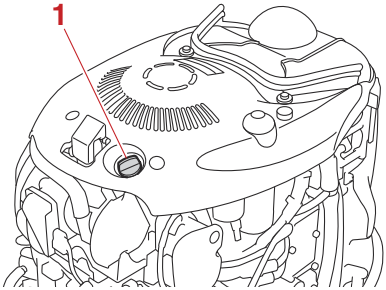

1. Oil filler cap

(7) Prepare a suitable container that holds a larger amount than the engine oil capacity. Remove the drain screw and gasket while holding the container under

the drain hole. Let the oil drain completely. Wipe up any spilled oil immediately.

L transom models

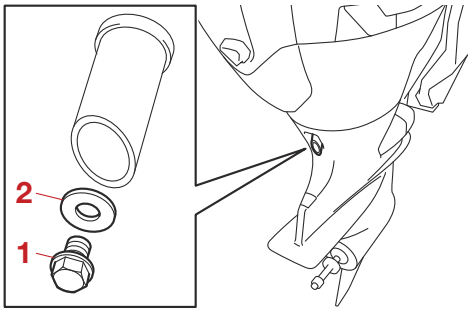

1. Drain screw
2. Gasket

X transom models

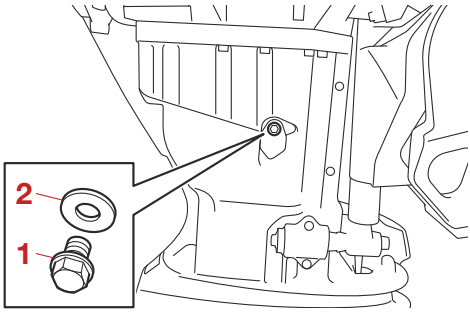

1. Drain screw
2. Gasket

TIP:
If the oil does not drain easily, change the tilt angle or turn the outboard motor to port and starboard to drain the oil.

(8) Put a new gasket on the drain screw. Apply a light coat of oil to the gasket and install the drain screw.

Drain screw tightening torque:
27 N·m (2.7 kgf·m, 20 lb·ft)

TIP:
If a torque wrench is not available when you are installing the drain screw, finger tighten the screw just until the gasket comes into contact with the surface of the drain hole. Then tighten 1/4 to 1/2 turn more. Tighten the drain screw to the correct torque with a torque wrench as soon as possible.

(9) Add the correct amount of oil through the filler hole. Put back the filler cap and the dipstick. ***NOTICE:*** **Overfilling the oil could cause leakage or damage. If the oil level is above the upper level mark, drain until the level meets the specified capacity.** [ECM01851]

Recommended engine oil:
YAMALUBE 4 or 4-stroke outboard motor oil
Engine oil quantity (without oil filter replacement):
4.3 L (4.55 US qt, 3.78 Imp.qt)
Engine oil quantity (with oil filter replacement):
4.5 L (4.76 US qt, 3.96 Imp.qt)

(10) Leave the outboard motor for 5-10 minutes.

(11) Remove the oil dipstick and wipe it clean.

(12) Insert the dipstick and remove it again. Be sure to completely insert the dipstick into the dipstick guide, otherwise the oil level measurement will be incorrect.

(13) Recheck the oil level using the dipstick to be sure the level falls between the upper and lower marks. Consult your Yamaha dealer if the oil level is out of specified level.

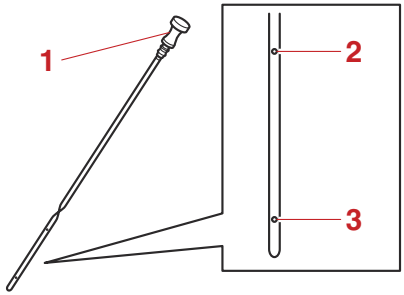

1. Oil dipstick
2. Upper mark
3. Lower mark

(14) Start the engine and make sure that the low oil pressure-alert indicator remains off. Also, make sure that there are no oil leaks. ***NOTICE:*** **If the low oil pressure-alert indicator comes on or if there are oil leaks, stop the engine and find the cause. Continued operation with a problem could cause severe engine damage. Consult your Yamaha dealer if the problem cannot be located and corrected.** [ECM01623]

(15) Apply LOCTITE 572 to the threads of the bolts and screw, and then install the apron.

TIP:

LOCTITE 572 is used as a sealant.

(16) Install the top cowling.

(17) Dispose of used oil according to local regulations.

TIP:

- For more information on the disposal of used oil, consult your Yamaha dealer.
- Change the oil more often when operating the engine under adverse conditions such as extended trolling.

EMU48110

Replacing the engine oil filter

EWM00761

WARNING

- **Avoid draining the engine oil immediately after stopping the engine. The oil is hot and should be handled with care to avoid burns.**
- **Be sure the outboard motor is securely fastened to the transom or a stable stand.**

Yamaha recommends you to have a Yamaha dealer replace the engine oil filter.

If you perform replacement yourself, follow the procedure below. If you have any questions, please consult a Yamaha dealer.

(1) Drain the engine oil. For further information, see page 95.

(2) Place a cloth under the engine oil filter.

(3) Turn the engine oil filter counterclockwise and remove it.

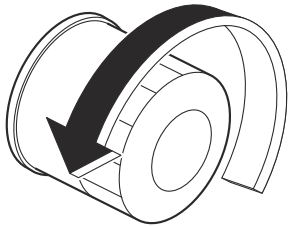

TIP:

- Wipe up any spilled engine oil.
- Dispose of the removed engine oil filter in accordance with local regulations.

(4) Apply engine oil to the O-ring of the engine oil filter.

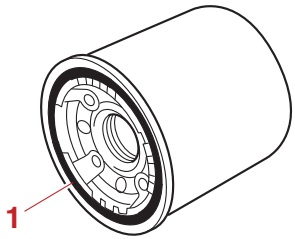

1. O-ring

(5) Turn the engine oil filter clockwise and tighten it to the specified torque.

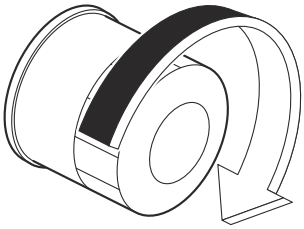

Engine oil filter:
18 N·m (1.8 kgf·m, 13 lb·ft)

(6) Fill up the engine with engine oil. For further information, see page 95.

EMU48060

Why Yamalube

YAMALUBE oil is a Genuine YAMAHA Part born of the engineers' passion and belief that engine oil is an important liquid engine component. We form teams of specialists in the fields of mechanical engineering, chemistry, electronics and track testing, and have them develop the engine together with the oil it will use. Yamalube oils take full advantage of the base oil's qualities and blend in the ideal balance of additives to make sure the final oil clears our performance standards. Thus, Yamalube mineral, semisynthetic and synthetic oils have their own distinct characters and value. Yamaha's experience gained over many years of research and development into oil since the 1960's helps make Yamalube the best choice for your Yamaha engine.

YAMALUBE®

EMU29116

Inspecting wiring and connectors

- Inspect that each connector is engaged securely.
- Inspect that each ground lead is properly secured.

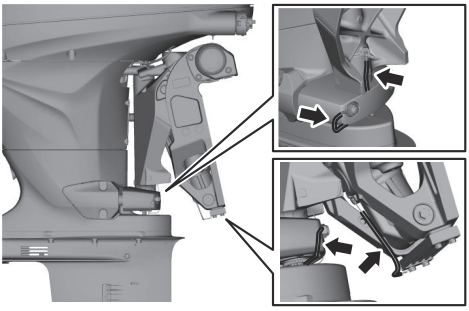

EMU41671

Inspecting propeller

EWM02681

WARNING

You could be seriously injured if the engine accidentally starts when you are near the propeller. Before inspecting, removing, or installing the propeller, move the control lever to the neutral position, turn the main switch to the "OFF" (off) position, remove the key, and remove the clip from the engine shut-off switch. Turn off the battery cut-off switch if your boat has one.

Do not use your hand to hold the propeller when loosening or tightening the propeller nut. Place a block of wood between the anti-cavitation plate and the propeller to prevent the propeller from turning.

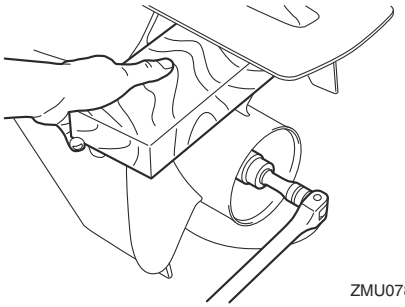

ZMU07854

Checkpoints

- Check each of the propeller blades for erosion from cavitation or ventilation, and other damage.
- Check the propeller shaft for damage.
- Check the splines for wear and damage.
- Check for fish line tangled around the propeller shaft.

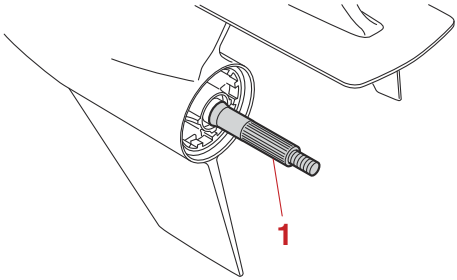

1. Propeller shaft

EMU41992

Removing propeller

(1) Straighten the cotter pin and pull it out using a pair of pliers.

(2) Remove the propeller nut, washer, and spacer. **WARNING! Do not use your hand to hold the propeller when loosening the propeller nut.** [EWM01891]

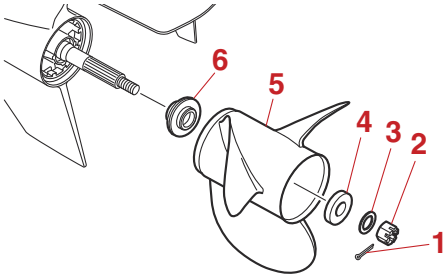

1. Cotter pin
2. Propeller nut
3. Washer
4. Spacer
5. Propeller
6. Thrust washer

(3) Remove the propeller and thrust washer.

EMU41963

Installing propeller

EWM00771

WARNING

On counter rotation models, be sure to use a propeller intended for counter-clockwise rotation. These propellers are identified with the letter "L" after the size indication on the propeller. Otherwise the boat could move in the opposite direction from that expected.

ECM00502

NOTICE

Make sure to use a new cotter pin and bend the ends over securely. Otherwise, the propeller could come off during operation and be lost.

(1) Apply Yamalube Marine Grease to the propeller shaft.

(2) Install the thrust washer and propeller on the propeller shaft. ***NOTICE:*** **Make sure to install the thrust washer before installing the propeller. Otherwise, the lower case and propeller boss could be damaged.** [ECM01882]

(3) Install the spacer, washer, and propeller nut. Tighten the propeller nut to the specified torque.

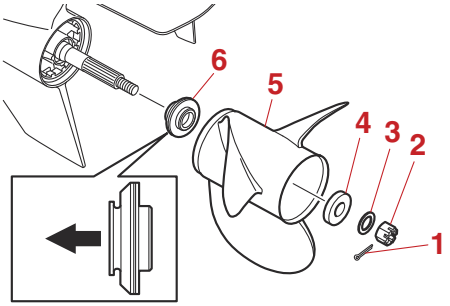

1. Cotter pin
2. Propeller nut
3. Washer
4. Spacer
5. Propeller
6. Thrust washer

Propeller nut tightening torque:
54 N·m (5.4 kgf·m, 40 lb·ft)

(4) Align the propeller nut slot with the propeller shaft hole. Insert a new cotter pin in the hole and bend the cotter pin ends. ***NOTICE:*** **Do not reuse the cotter pin. Otherwise, the propeller can come off during operation.** [ECM01892]

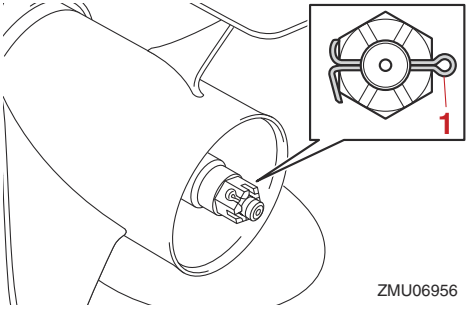

1. Cotter pin

TIP:

If the propeller nut slot does not align with the propeller shaft hole after tightening the propeller nut to the specified torque, tighten the nut further to align the slot with the hole.

EMU47101

Changing gear oil

EWM00801

WARNING

- **Be sure the outboard motor is securely fastened to the transom or a stable stand. You could be severely injured if the outboard motor falls on you.**
- **Never get under the lower unit while it is tilted, even when the tilt support lever or knob is locked. Severe injury could**

occur if the outboard motor accidentally falls.

(1) Tilt the outboard motor so that the gear oil drain screw is at the lowest point possible.
(2) Place a suitable container under the lower unit.
(3) Remove the gear oil drain screw and gasket.

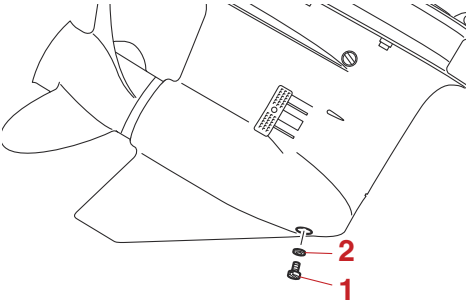

1. Gear oil drain screw
2. Gasket

TIP:
Always use new gasket. Do not reuse the removed gasket.

(4) Remove the oil level plug and gasket to allow the oil to drain completely. ***NOTICE:*** **Check the used gear oil after it has been drained. If the gear oil is milky or contains water or a large amount of metal particles, the gear case may be damaged. Have a Yamaha dealer check and repair the outboard motor.** [ECM00714]

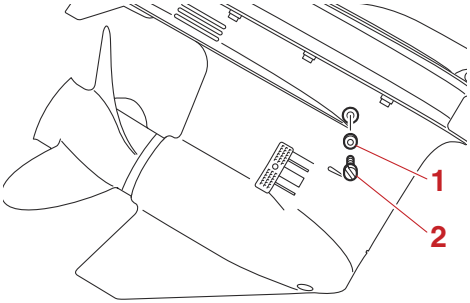

1. Gasket
2. Oil level plug

TIP:
For disposal of used gear oil, consult your Yamaha dealer.

(5) Remove any metal particles on the magnetic gear oil drain screw. ***NOTICE:*** **If there is an excessive quantity of metal particles on the magnetic gear oil drain screw, this can indicate lower unit problem. Consult your Yamaha dealer.** [ECM01901]
(6) Put the outboard motor in a vertical position.
(7) Using a flexible or pressurized filling device, inject the gear oil into the gear oil drain screw hole.

Recommended gear oil:
YAMALUBE outboard gear oil or Hypoid gear oil
Recommended gear oil grade:
SAE 90 API GL-4 / SAE 80W API GL-5 / SAE 90 API GL-5
Gear oil quantity:
0.980 L (1.036 US qt, 0.862 Imp.qt)

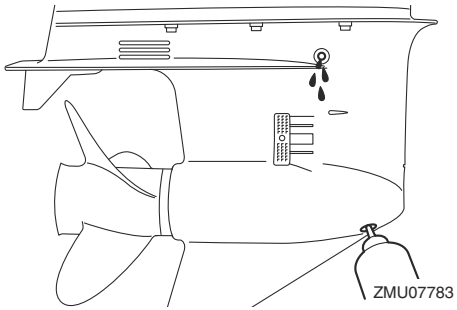

(8) Put a new gasket on the oil level plug. When the gear oil begins to flow out of the oil level plug hole, insert and tighten the oil level plug to the specified torque.

TIP:
Apply a light coat of gear oil to the oil level plug thread and gasket before installation.

Tightening torque: 7 N·m (0.7 kgf·m, 5.2 lb·ft)

(9) Put a new gasket on the gear oil drain screw. Insert and tighten the gear oil drain screw to the specified torque.

TIP:
Apply a light coat of gear oil to the gear oil drain screw thread and gasket before installation.

Tightening torque: 7 N·m (0.7 kgf·m, 5.2 lb·ft)

EMU29318

Inspecting and replacing anode(s)

Yamaha outboard motors are protected from corrosion by sacrificial anodes. Inspect the external anodes periodically. Remove scales from the surfaces of the anodes. Consult a Yamaha dealer for replacement of external anodes.

ECM00721

NOTICE

Do not paint anodes, as this would render them ineffective.

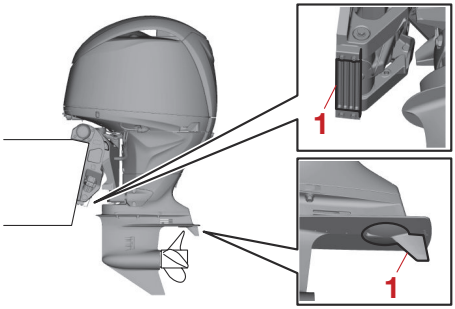

1. Anode

TIP:
Inspect ground leads attached to external anodes on equipped models. Consult a Yamaha dealer for inspection and replacement of internal anodes attached to the power unit.

EMU29324

Checking battery (for electric start models)

EWM01903

WARNING

Battery electrolyte is poisonous and caustic, and batteries generate explosive hydrogen gas. When working near the battery:

- **Wear protective eye gear and rubber gloves.**
- **Do not smoke or bring any other source of ignition near the battery.**

The procedure for checking the battery varies for different batteries. This procedure contains typical checks that apply to many

batteries, but you should always refer to the battery manufacturer's instructions.

ECM01921

NOTICE

A poorly maintained battery will quickly deteriorate.

(1) Check the electrolyte level.

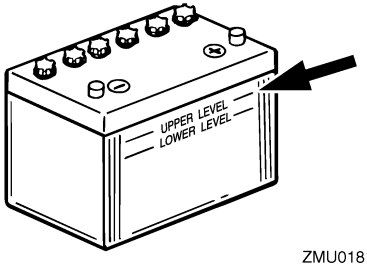

ZMU01810

(2) Check the battery's charge. If your boat is equipped with the digital speedometer, the voltmeter and low battery alert functions will help you monitor the battery's charge. If the battery needs charging, consult your Yamaha dealer.

(3) Check the battery connections. They should be clean, secure, and covered by an insulating cover. **WARNING! Bad connections can produce shorting or arcing and cause an explosion.** [EWM01913]

EMU3560A

Connecting the battery

EWM00573

WARNING

Mount the battery holder securely in a dry, well-ventilated, vibration-free location in the boat. Install a fully charged battery in the holder.

ECM01126

NOTICE

Do not reverse the battery cables. Otherwise, the electrical parts could be damaged.

(1) Make sure the main switch (on applicable models) is turned to the "**OFF**" (off) position before working on the battery.

(2) Connect the positive battery cable (red) to the positive (+) terminal first. Then, connect the negative battery cable (black) to the negative (-) terminal.

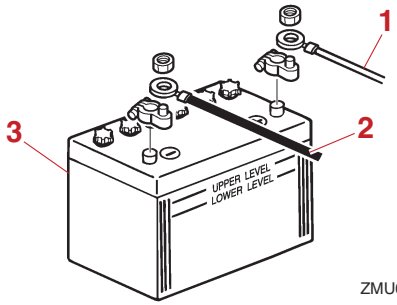

ZMU01811

1. Positive battery cable (red)
2. Negative battery cable (black)
3. Battery

(3) The electrical contacts of the battery and cables must be clean and properly connected, or the battery will not start the engine.

Connecting an accessory battery (optional)

If connecting an accessory battery, consult your Yamaha dealer about correct wiring. It is recommendable to install the fuse to the isolator lead as shown in the illustration. For the fuse size, be sure to follow local regulations. For example, for USA, the ABYC rules (E-11) should be observed.

Single engine

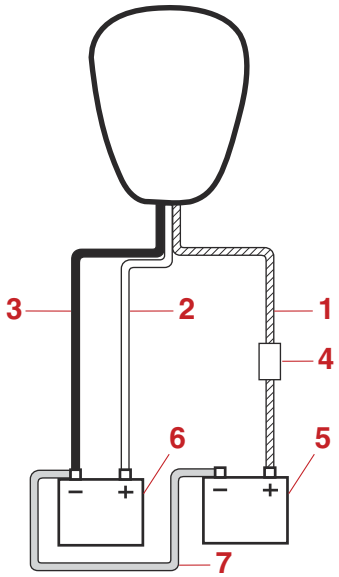

1. Isolator lead with circuit protection
2. Positive battery cable (red)
3. Negative battery cable (black)
4. Fuse
5. Battery for accessories
6. Battery for starting
7. Negative connecting cable

Twin engines

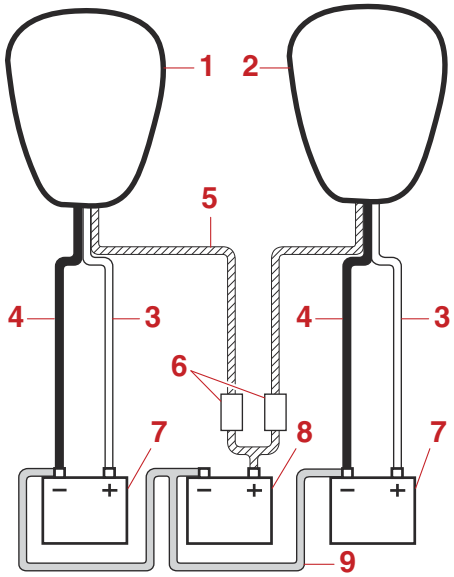

1. Starboard side engine
2. Port side engine
3. Positive battery cable (red)
4. Negative battery cable (black)
5. Isolator leads with circuit protection
6. Fuse
7. Battery for starting
8. Battery for accessories
9. Negative connecting cable

EMU29373

Disconnecting the battery

(1) Turn off the battery cut-off switch (if equipped) and main switch. ***NOTICE:*** **If they are left on, the electrical system can be damaged.** [ECM01931]

(2) Disconnect the negative cable(s) from the negative (-) terminal. ***NOTICE:*** **Always disconnect all negative battery cables (-) first to avoid a short circuit**

and damage to the electrical system.

[ECM01942]

(3) Disconnect the positive cable(s) and remove the battery from the boat.
(4) Clean, maintain, and store the battery according to the manufacturer's instructions.

EMU38661

Storing the battery

When storing your Yamaha outboard motor for prolonged periods of time (2 months or longer), remove the battery and store it in a cool, dry place.
Check the battery and charge it if necessary.

EMU41862

Troubleshooting

This section describes the likely causes and remedies for problems, such as those in the fuel, compression, and ignition systems, poor starting, and loss of power. Please note that all of the items in this section may not apply to your model.
If your outboard motor requires repair, bring it to a Yamaha dealer.
If the engine trouble-alert indicator is blinking, consult your Yamaha dealer.

Starter will not operate.
Q. Does the DEC alert indicator come on in orange?
A. Have serviced by a Yamaha dealer.

Q. Is control lever in gear?
A. Shift to neutral.

Q. Is battery capacity low or weak?
A. Check battery condition. Use battery of recommended capacity.

Q. Are battery connections corroded or loose?
A. Tighten battery cables and clean battery terminals.

Q. Is fuse for starter relay or electric circuit blown?
A. Check for cause of electric overload and repair. Replace fuse with one of correct amperage.

Q. Are starter components malfunctioning?
A. Have serviced by a Yamaha dealer.

Engine will not start (starter operates).
Q. Is clip on engine shut-off cord (lanyard) installed?
A. Install clip to engine shut-off switch.

Q. Is fuel tank empty?
A. Fill tank with clean, fresh fuel.

Q. Is fuel contaminated or stale?
A. Fill tank with clean, fresh fuel.

Q. Is fuel filter clogged?
A. Clean or replace fuel filter.

Q. Is fuel pump malfunctioning?
A. Have serviced by a Yamaha dealer.

Q. Are spark plugs fouled or of incorrect type?
A. Inspect spark plugs. Clean or replace with recommended type.

Q. Are ignition parts malfunctioning?
A. Have serviced by a Yamaha dealer.

Q. Is ignition wiring damaged or poorly connected?
A. Inspect wires for breaks and wear. Have connections tightened and broken or worn wires replaced by a Yamaha dealer.

Q. Are engine inner parts damaged?
A. Have serviced by a Yamaha dealer.

Engine idles irregularly or stalls.
Q. Are spark plugs fouled or of incorrect type?
A. Inspect spark plugs. Clean or replace with recommended type.

Q. Is fuel system clogged?

A. Inspect for pinched or kinked fuel line or other obstructions in fuel system.

Q. Is fuel contaminated or stale?
A. Fill tank with clean, fresh fuel.

Q. Is fuel filter clogged?
A. Clean or replace fuel filter.

Q. Are ignition parts malfunctioning?
A. Have serviced by a Yamaha dealer.

Q. Has alert system activated?
A. Find and correct cause of alert.

Q. Is spark plug gap incorrect?
A. Replace spark plug.

Q. Is ignition wiring damaged or poorly connected?
A. Inspect wires for breaks and wear. Have connections tightened and broken or worn wires replaced by a Yamaha dealer.

Q. Is specified engine oil not being used?
A. Inspect engine oil and replace with specified type.

Q. Is thermostat clogged or malfunctioning?
A. Have serviced by a Yamaha dealer.

Q. Is fuel pump malfunctioning?
A. Have serviced by a Yamaha dealer.

Q. Is fuel tank air vent restricted or clogged?
A. Remove obstruction.

Q. Is fuel joint connection incorrect?
A. Connect correctly.

Q. Is battery cable disconnected?
A. Connect securely.

Alert buzzer sounds or indicator lights.
Q. Is cooling system clogged?
A. Inspect cooling water inlet for obstructions.

Q. Is low oil pressure-alert indicator on or blinking?
A. Have serviced by a Yamaha dealer.

Q. Is heat range of spark plugs incorrect?
A. Inspect spark plugs and replace with recommended type.

Q. Is specified engine oil not being used?
A. Inspect engine oil and replace with specified type.

Q. Is engine oil contaminated or deteriorated?
A. Replace engine oil with specified type.

Q. Is oil filter clogged?
A. Have serviced by a Yamaha dealer.

Q. Is oil pump malfunctioning?
A. Have serviced by a Yamaha dealer.

Q. Is thermostat or water pump malfunctioning?
A. Have serviced by a Yamaha dealer.

Q. Is there excess water in fuel filter?
A. Drain fuel filter.

Engine power loss.
Q. Is propeller damaged?
A. Have propeller repaired or replaced.

Q. Is propeller pitch or diameter incorrect?

A. Install correct propeller to operate outboard motor at its recommended speed (r/min) range.

Q. Is outboard motor mounted at incorrect height on transom?
A. Have outboard motor adjusted to proper transom height.

Q. Has alert system activated?
A. Find and correct cause of alert.

Q. Is boat bottom fouled with marine growth?
A. Clean boat bottom.

Q. Are spark plugs fouled or of incorrect type?
A. Inspect spark plugs. Clean or replace with recommended type.

Q. Are weeds or other foreign material tangled on gear housing?
A. Remove foreign material and clean lower unit.

Q. Is fuel system clogged?
A. Inspect for pinched or kinked fuel line or other obstructions in fuel system.

Q. Is fuel filter clogged?
A. Clean or replace fuel filter.

Q. Is fuel contaminated or stale?
A. Fill tank with clean, fresh fuel.

Q. Is spark plug gap incorrect?
A. Replace spark plug.

Q. Is ignition wiring damaged or poorly connected?
A. Inspect wires for breaks and wear. Have connections tightened and broken or worn wires replaced by a Yamaha dealer.

Q. Are electrical parts malfunctioning?
A. Have serviced by a Yamaha dealer.

Q. Is specified fuel not being used?
A. Replace fuel with specified type.

Q. Is specified engine oil not being used?
A. Replace engine oil with specified type.

Q. Is thermostat clogged or malfunctioning?
A. Have serviced by a Yamaha dealer.

Q. Is fuel tank air vent restricted or clogged?
A. Remove obstruction.

Q. Is fuel pump malfunctioning?
A. Have serviced by a Yamaha dealer.

Q. Is fuel joint connection incorrect?
A. Connect correctly.

Q. Is heat range of spark plugs incorrect?
A. Inspect spark plugs and replace with recommended type.

Q. Is engine not responding properly to control lever position?
A. Have serviced by a Yamaha dealer.

Engine vibrates excessively.
Q. Is propeller damaged?
A. Have propeller repaired or replaced.

Q. Is propeller shaft damaged?
A. Have serviced by a Yamaha dealer.

Q. Are weeds or other foreign material tangled on propeller?
A. Remove and clean propeller.

Q. Are outboard motor mounting bolts loose?
A. Tighten bolts or have serviced by a Yamaha dealer.

Q. Is steering pivot loose or damaged?
A. Have serviced by a Yamaha dealer.

EMU29436

Temporary action in emergency

EMU29442

Impact damage

EWM00871

WARNING

The outboard motor can be seriously damaged by a collision while operating or trailering. Damage could make the outboard motor unsafe to operate.

If the outboard motor hits an object in the water, follow the procedure below.

(1) Stop the engine immediately.
(2) Check the control system and all components for damage. Also, check the boat for damage.
(3) Whether damage is found or not, return to the nearest harbor slowly and carefully.
(4) Have a Yamaha dealer check the outboard motor before operating it again.

EMU29454

Running single engine (twin engines)

When using only one engine in an emergency, be sure to keep the unused one tilted up and operate the other engine at low speed.

ECM00371

NOTICE

If the boat is operated with one engine in the water but not running, water may run into the exhaust pipe due to wave action, causing engine trouble.

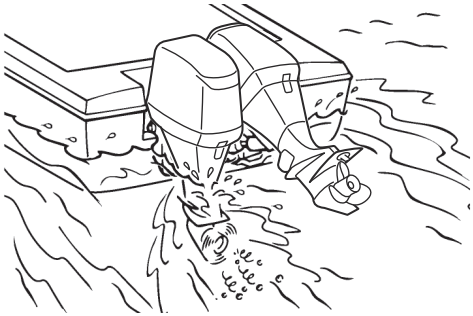

TIP:

When you are maneuvering at low speed, such as near a dock, it is recommended that both engines be running with one in neutral gear if possible.

EMU46763

Replacing fuse

EWM00632

WARNING

Substituting an incorrect fuse or a piece of wire could allow excessive current flow. This could cause electric system damage and a fire hazard.

If a fuse has blown, replace the fuse according to the following procedure.

(1) Turn the main switch to the "OFF" (off) position.
(2) Remove the fuse box cover.
(3) If the fuse is secured using screws, remove the screws, and then remove the fuse. Install a spare fuse of the proper amperage, and then tighten the screws.

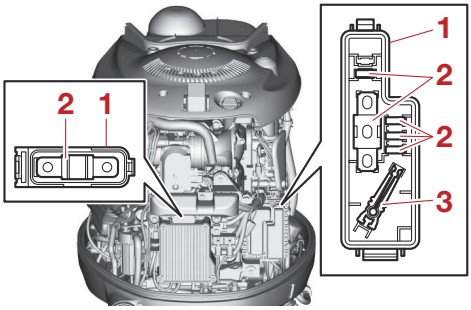

1. Fuse box cover
2. Spare fuse (10 A, 15 A, 20 A, 30 A, 60 A, 70 A)
3. Fuse puller

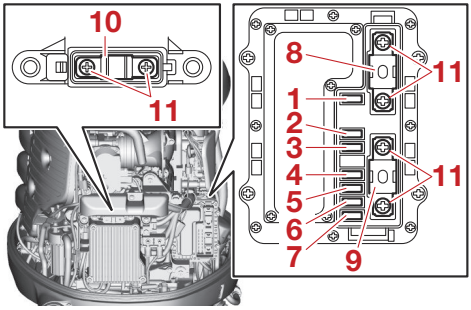

1. Fuel feed pump fuse (10 A)
2. Main switch / PTT switch fuse (20 A)
3. Shift actuator fuse (15 A)
4. Starting switch fuse (30 A)
5. Ignition coil / Fuel injector / Variable camshaft timing / Engine ECM (Electronic control module) fuse (30 A)
6. Electric throttle valve fuse (10 A)
7. Fuel pump fuse (15 A)
8. Engine main fuse (60 A)
9. Isolator fuse (60 A)
10. Power STRG fuse (70 A)
11. Screw

(4) If the fuse is not secured using screws, remove the fuse using the fuse puller, and then install a spare fuse of the proper amperage.

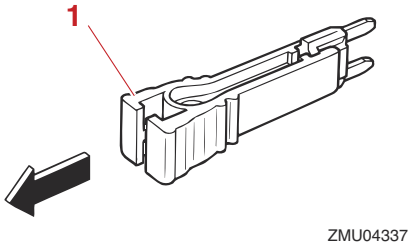

1. Fuse puller

Consult your Yamaha dealer if the new fuse immediately blows again.

EMU29529

Power trim and tilt will not operate

EWM02331

WARNING

Never get under the engine while it is tilted. Severe injury could occur if the outboard motor accidentally falls.

If the outboard motor cannot be tilted up/down using the power trim and tilt unit, e.g. because of a discharged battery or a failure with the unit itself, the outboard motor can be tilted manually.

(1) Stop the engine.
(2) Loosen the manual valve screw by turning it counterclockwise until it stops.

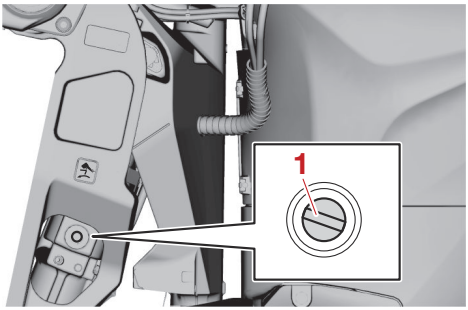

1. Manual valve screw

(3) Adjust the outboard motor to a navigable angle, tighten the manual valve screw clockwise, and secure the outboard motor.

EMU49490

Electro-Hydraulic Steering system will not operate

If the Electro-Hydraulic Steering system does not operate, the outboard motor can be steered manually.

To steer the outboard motor manually

(1) Remove the clamp bracket cover by removing the bolts.

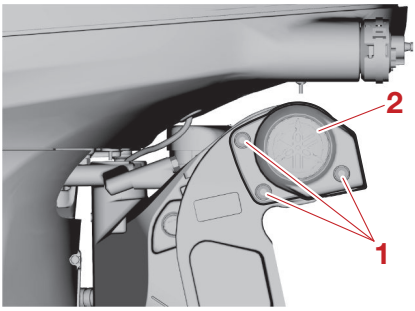

1. Bolt
2. Clamp bracket cover

(2) Loosen the manual valve screw until it stops.

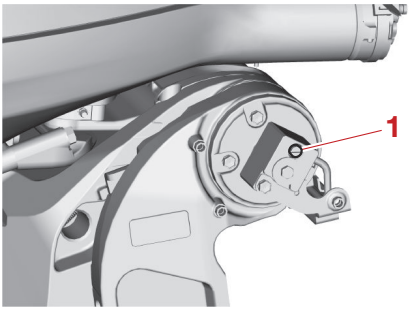

1. Manual valve screw

(3) Steer the outboard motor manually.

(4) Tighten the manual valve screw until it stops.

EMU50331

Water separator-alert is activated after leaving port

EWM02543

WARNING

Gasoline is highly flammable, and its vapors are flammable and explosive.

- **Do not perform this procedure on a hot or running engine. Allow the engine to cool.**
- **There will be fuel in the fuel filter. Keep away from sparks, cigarettes, flames or other sources of ignition.**
- **Some fuel will spill during this procedure. Catch the fuel in a rag. Wipe up any spilled fuel immediately.**
- **The fuel filter must be reassembled carefully with the O-ring and filter cup in place. Improper assembly or replacement could result in a fuel leak, which could result in a fire or explosion hazard.**

If the water separator-alert indicator blinks or the buzzer sounds intermittently, perform the following procedure.

TIP:

The buzzer sounds only when the remote control lever is placed in neutral.

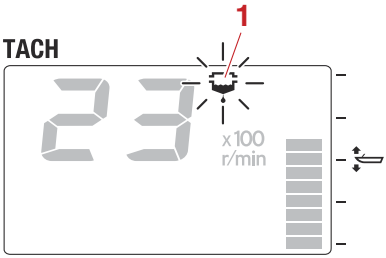

ZMU05441

1. Water separator-alert indicator

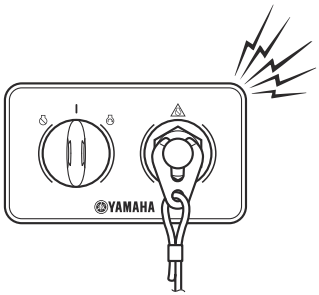

(1) Stop the engine.
(2) Remove the top cowling.
(3) Disconnect the water detection switch coupler. ***NOTICE:*** **Be careful not to get any water on the water detection switch coupler, otherwise a malfunction could occur.** [ECM01951]

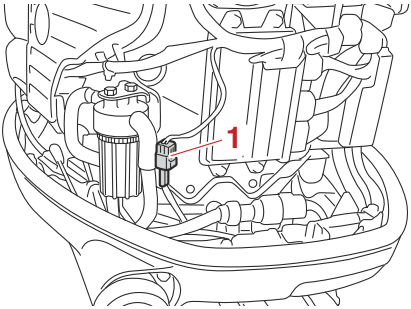

1. Water detection switch coupler

(4) Remove the filter cup from the filter housing, and then remove the O-ring from the filter cup. ***NOTICE:*** **Be careful not to twist the water detection switch lead when unscrewing the filter cup.** [ECM01961]

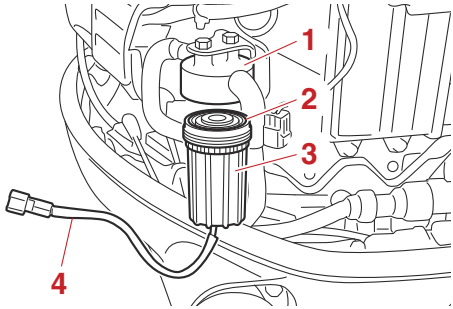

1. Filter housing
2. O-ring
3. Filter cup
4. Water detection switch lead

(5) Drain the water in the filter cup by soaking it up with a rag.
(6) Put the O-ring on the filter cup in its original position, and then install the filter cup onto the filter housing. ***NOTICE:*** **Be careful not to twist the water detection switch lead when screwing**

the filter cup onto the filter housing. [ECM01971]

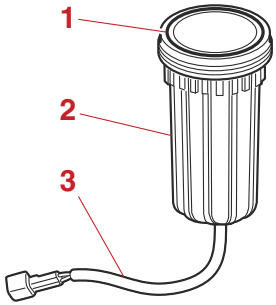

1. O-ring
2. Filter cup
3. Water detection switch lead

(7) Connect the water detection switch coupler securely until a click is heard.
(8) Install the top cowling.
(9) Turn the main switch to the "ON" (on) position and check that the water separator-alert indicator remains off and the buzzer does not sound. If the water separator-alert indicator blinks or the buzzer sounds, have your Yamaha dealer check the outboard motor. ***NOTICE:*** **Although the buzzer will stop when the engine is started and the control lever is moved to the forward or reverse position, do not use the outboard motor. Otherwise, serious engine damage could occur.** [ECM02481]

EMU33502

Treatment of submerged motor

If the outboard motor is submerged, immediately take it to a Yamaha dealer. Otherwise some corrosion may begin almost immediately. ***NOTICE:*** **Do not attempt to run the outboard motor until it has been completely inspected.** [ECM00402]

6

6X6 switch 35
6Y8 Multifunction meters.....43

A

Alcohol and drugs.....2
Alert system 47
All Start/Stop switch panel (optional)....36
Anode(s), inspecting and replacing 105
Anti-fouling paint.....19
Approval label of emission control certificate 20
Avoid collisions 3

B

Battery.....60
Battery requirements 16
Battery, checking (electric start models) 105
Battery, connecting.....106
Battery, disconnecting 107
Battery, storing.....108
Boat horsepower rating 15
Boating safety.....2
Boating safety publications 4
Breaking in engine 54

C

Carbon monoxide 2
CE Marking / UKCA Marking.....6
Checks after engine warm up.....67
Checks after starting engine.....66
Checks before starting engine.....55
CL5 Display.....41
Cleaning the outboard motor.....86
Collisions with floating or submerged objects.....3
Compliance mark label 6
Components diagram 23
Control functions, checking.....56
Control lever.....29
Cooling water.....66
Cowling lock lever.....39
Cruising in salt water or other conditions 81

D

DEC alert indicator.....30
Digital electronic control 28
Digital electronic control alert 47
Digital electronic control requirements ..16

E

EC Declaration of Conformity (DoC).....5
Electric shock 1
Electro hydraulic steering fluid requirements.....18
Electro-Hydraulic Steering system will not operate 114
Electronic Key Switch (EKS) 33
Electronic Key Switch panel 33
Emergency equipment.....20
Emergency, running single engine in an 112
Emergency, temporary action in 112
Emission control information 20
Engine idle speed, inspecting.....95
Engine oil 57
Engine oil requirements 18
Engine oil, changing 95
Engine oil, filling.....54
Engine shut-off cord (lanyard).....1,56
Engine shut-off cord (lanyard) and clip 34,36

F

Filling fuel.....60
First-time operation 54
Flushing cooling water passage 85
Flushing device 39,57
Flushing with the flushing attachment ..84
Fuel filter 40
Fuel filter, checking 56
Fuel leaks, checking for.....56
Fuel level.....55
Fuel requirements 19
Fuel system.....55

INDEX

Fuse, replacing 112

G

Gasoline 2,19
Gasoline exposure and spills.....2
Gear oil, changing.....103
Greasing.....92

H

Helm Master EX (upgradable).....27
Hot parts.....1

I

Identification numbers record.....5
Impact damage.....112
Installation requirements.....15

K

Key fob.....33
Key number 5

L

Laws and regulations.....4
Low oil pressure alert.....49
Lubrication 85

M

Main switch.....35
Maintenance chart 1 88
Maintenance chart 2 91
Modifications 2
Mounting height.....52
Mounting outboard motor.....15
Mounting the outboard motor.....52
Muddy or acidic water.....19

N

Neutral hold switch.....31
Neutral hold switch operation.....68

O

Operating engine 60
Outboard motor (painted surface), checking 86
Outboard motor disposal requirements.....20
Outboard motor equipment.....37
Outboard motor safety 1
Outboard motor serial number 5
Outboard motor, checking.....57
Overheat alert 47
Overloading.....3

P

Passenger training 4
Passengers 2
People in the water.....2
Periodic maintenance 86
Personal flotation devices (PFDs).....2
Power trim and tilt 1
Power trim and tilt switch (bottom cowling).....37
Power trim and tilt switches 30
Power trim and tilt system.....59
Power trim and tilt will not operate.....113
Procedure for starting engine 61
Procedure for stopping engine 70
Propeller.....1
Propeller (counter rotation models) 17
Propeller selection 17
Propeller, inspecting 102
Propeller, installing.....103
Propeller, removing 102
PTT TotalTilt 78

R

Read manuals and labels 8
Replacement parts.....87
Replacing the engine oil filter 100
Rotating parts 1

S

Sending fuel.....60
Severe operating conditions.....87
Shallow water 80
Shifting.....68

Shifting (checks after engine warm up) ..67
Single lever switch 32
Single lever switch operation.....69
Spark plug, inspecting 94
Specifications 14
Speed control switch 31
Star labels 20
Start-in-gear protection 18
Start/Stop switch panel 36
Starting engine.....61
Stop switches 67
Stopping boat 70
Stopping engine.....70
Storing outboard motor 83
Submerged outboard motor 116

T

Tilt support lever 38
Tilting up and down 76
Top cowling, installing.....58
Top cowling, removing.....55
Transporting and storing outboard motor 83
Trim tab with anode 38
Trimming outboard motor 74
Troubleshooting 109

U

Use, your data 11

W

Warming up engine.....67
Warning labels 8
Water separator alert 50
Water separator-alert is activated after leaving port.....114
Weather.....4
Wiring and connectors, inspecting 101

Y

Yamaha Security System (Y-COP/ Optional) 35
Yamalube 101

Printed in Japan
January 2026–0.1 × 1 CR