YAMAHA

4C

OWNER'S MANUAL

⚠ **Read this manual carefully before operating this outboard motor.**

6GP-28199-74-E0

Read this manual carefully before operating this outboard motor. Keep this manual onboard in a waterproof bag when boating. This manual should stay with the outboard motor if it is sold.

EMU25108

To the owner

Thank you for selecting a Yamaha outboard motor. This Owner's Manual contains information needed for proper operation, maintenance and care. A thorough understanding of these simple instructions will help you obtain maximum enjoyment from your new Yamaha. If you have any question about the operation or maintenance of your outboard motor, please consult a Yamaha dealer.

In this Owner's Manual particularly important information is distinguished in the following ways.

⚠ : This is the safety alert symbol. It is used to alert you to potential personal injury hazards. Obey all safety messages that follow this symbol to avoid possible injury or death.

EWM00782

⚠ WARNING

A WARNING indicates a hazardous situation which, if not avoided, could result in death or serious injury.

ECM00702

NOTICE

A NOTICE indicates special precautions that must be taken to avoid damage to the outboard motor or other property.

TIP:

A TIP provides key information to make procedures easier or clearer.

Yamaha continually seeks advancements in product design and quality. Therefore, while this manual contains the most current product information available at the time of printing, there may be minor discrepancies between your machine and this manual. If there is any question concerning this manual, please consult your Yamaha dealer.

To ensure long product life, Yamaha recommends that you use the product and perform the specified periodic inspections and maintenance by correctly following the instructions in the owner's manual. Any damage resulting from neglect of these instructions is not covered by warranty.

Some countries have laws or regulations restricting users from taking the product out of the country where it was purchased, and it may be impossible to register the product in the destination country. Additionally, the warranty may not apply in certain regions. When planning to take the product to another country, consult the dealer where the product was purchased for further information.

If the product was purchased used, please consult your closest dealer for customer re-registration, and to be eligible for the specified services.

TIP:

The 4CMH and the standard accessories are used as a base for the explanations and illustrations in this manual. Therefore some items may not apply to every model.

EMU25123

4C
OWNER'S MANUAL
©2020 by Yamaha Motor Co., Ltd.
1st Edition, November 2019
All rights reserved.
Any reprinting or unauthorized use without the written permission of Yamaha Motor Co., Ltd. is expressly prohibited.
Printed in Japan

Table of contents

Safety information 1
Outboard motor safety 1
Propeller 1
Rotating parts 1
Hot parts 1
Electric shock 1
Engine shut-off cord (lanyard) 1
Gasoline 1
Gasoline exposure and spills 1
Carbon monoxide 2
Modifications 2
Boating safety 2
Alcohol and drugs 2
Personal flotation devices (PFDs) 2
People in the water 2
Passengers 2
Overloading 2
Avoid collisions 3
Collisions with floating or submerged objects 3
Weather 3
Passenger training 4
Boating safety publications 4
Laws and regulations 4

General information 5
Identification numbers record 5
Outboard motor serial number 5
EC Declaration of Conformity (DoC) 5
CE Marking 5
Read manuals and labels 7
Warning labels 7

Specifications and requirements ... 10
Specifications 10
Installation requirements 11
Boat horsepower rating 11
Mounting outboard motor 11
Battery requirements 11
To use the battery 11
Propeller selection 11
Start-in-gear protection 12
Engine oil requirements 12
Why Yamalube 12
Fuel requirements 13
Gasoline 13
Muddy or acidic water 13
Anti-fouling paint 14
Outboard motor disposal requirements 14
Emergency equipment 14

Components 15
Components diagram 15
Fuel tank 15
Fuel tank 16
Fuel joint 16
Fuel tank cap 16
Air vent screw 16
Fuel cock 16
Open 17
Tiller handle 17
Gear shift lever 17
Throttle grip 17
Throttle indicator 17
Throttle friction adjuster 18
Engine shut-off cord (lanyard) and clip 18
Engine stop button 18
Choke knob 19
Manual starter handle 19
Steering friction adjuster 19
Trim rod (tilt pin) 19
Tilt support bar 20
Cowling lock lever 20

Installation 21
Installation 21
Mounting the outboard motor 21
Clamping the outboard motor 22

Table of contents

Operation 24
First-time operation..... 24
Breaking in engine..... 24
Getting to know your boat 24
Checks before starting engine 24
Fuel level 25
Remove the top cowling 25
Fuel system 25
Controls..... 25
Engine shut-off cord (lanyard)..... 25
Oil 25
Engine 25
Install top cowling 26
Filling fuel and engine oil..... 26
Filling fuel for portable tank..... 26
Filling fuel for built-in tank..... 27
Gasoline and oil mixing (100:1) 28
Operating engine..... 30
Sending fuel (portable tank) 30
Sending fuel 31
Starting engine 31
Checks after starting engine 33
Cooling water 33
Warming up engine 33
Choke start models..... 33
Checks after engine warm up 34
Shifting 34
Stop switches..... 34
Shifting 34
Stopping boat 35
Stopping engine..... 35
Procedure..... 35
Trimming outboard motor 36
Adjusting trim angle for manual tilt models 36
Adjusting boat trim..... 37
Tilting up and down 37
Procedure for tilting up (manual tilt models) 38
Procedure for tilting down (manual tilt models) 39
Shallow water 39
Cruising in shallow water (manual tilt models) 39
Cruising in other conditions..... 40

Maintenance 42
Transporting and storing outboard motor 42
Clamp screw mounting models 42
Storing outboard motor..... 43
Procedure..... 43
Lubrication 44
Cleaning the outboard motor 44
Checking painted surface of outboard motor 44
Periodic maintenance 44
Replacement parts 45
Severe operating conditions 45
Maintenance chart 1..... 46
Maintenance chart 2..... 47
Greasing 48
Cleaning and adjusting spark plug... 49
Checking fuel filter..... 49
Inspecting idle speed 50
Inspecting wiring and connectors 50
Checking propeller 50
Removing propeller 51
Installing propeller 51
Changing gear oil 52
Inspecting and replacing anode(s) ... 53

Trouble Recovery 54
Troubleshooting..... 54
Temporary action in emergency ... 57
Impact damage 57
Starter will not operate 57
Emergency starting engine..... 58
Treatment of submerged motor.... 59

INDEX 60

EMU33623

Outboard motor safety

Observe these precautions at all times.

EMU36502

Propeller

People can be injured or killed if they come in contact with the propeller. The propeller can keep moving even when the motor is in neutral, and sharp edges of the propeller can cut even when stationary.

- Stop the engine when a person is in the water near you.
- Keep people out of reach of the propeller, even when the engine is off.

EMU40272

Rotating parts

Hands, feet, hair, jewelry, clothing, personal flotation device (PFD) straps, etc., can become entangled with internal rotating parts of the engine, resulting in serious injury or death.

Keep the top cowling in place whenever possible. Do not remove or replace the top cowling with the engine running.

Only operate the engine with the top cowling removed according to the specific instructions in the manual. Keep hands, feet, hair, jewelry, clothing, PFD straps, etc., away from any exposed moving parts.

EMU33641

Hot parts

During and after operation, engine parts are hot enough to cause burns. Avoid touching any parts under the top cowling until the engine has cooled.

EMU33651

Electric shock

Do not touch any electrical parts while starting or operating the engine. They can cause shock or electrocution.

EMU33672

Engine shut-off cord (lanyard)

Attach the engine shut-off cord so that the engine stops if the operator falls overboard or leaves the helm. This prevents the boat from running away under power and leaving people stranded, or running over people or objects.

Always attach the engine shut-off cord to a secure place on your clothing or your arm or leg while operating. Do not remove it to leave the helm while the boat is moving. Do not attach the cord to clothing that could tear loose, or route the cord where it could become entangled, preventing it from functioning.

Do not route the cord where it is likely to be accidentally pulled out. If the cord is pulled during operation, the engine will shut off and you will lose most steering control. The boat could slow rapidly, throwing people and objects forward.

EMU33811

Gasoline

Gasoline and its vapors are highly flammable and explosive. Always, refuel according to the procedure on page 30 to reduce the risk of fire and explosion.

EMU33821

Gasoline exposure and spills

Take care not to spill gasoline. If gasoline spills, wipe it up immediately with dry rags. Dispose of rags properly.

If any gasoline spills onto your skin, immediately wash with soap and water. Change clothing if gasoline spills on it.

If you swallow gasoline, inhale a lot of gasoline vapor, or get gasoline in your eyes, get immediate medical attention. Never siphon fuel by mouth.

EMU33901
Carbon monoxide
This product emits exhaust gases which contain carbon monoxide, a colorless, odorless gas which may cause brain damage or death when inhaled. Symptoms include nausea, dizziness, and drowsiness. Keep cockpit and cabin areas well ventilated. Avoid blocking exhaust outlets.

EMU33781
Modifications
Do not attempt to modify this outboard motor. Modifications to your outboard motor may reduce safety and reliability, and render the outboard unsafe or illegal to use.

EMU33742
Boating safety
This section includes a few of the many important safety precautions that you should follow when boating.

EMU33711
Alcohol and drugs
Never operate after drinking alcohol or taking drugs. Intoxication is one of the most common factors contributing to boating fatalities.

EMU40281
Personal flotation devices (PFDs)
Have an approved PFD on board for every occupant. Yamaha recommends that you must wear a PFD whenever boating. At a minimum, children and non-swimmers should always wear PFDs, and everyone should wear PFDs when there are potentially hazardous boating conditions.

EMU33732
People in the water
Always watch carefully for people in the water, such as swimmers, skiers, or divers, whenever the engine is running. When someone is in the water near the boat, shift into neutral and stop the engine.
Stay away from swimming areas. Swimmers can be hard to see.
The propeller can keep moving even when the motor is in neutral. Stop the engine when a person is in the water near you.

EMU33752
Passengers
Consult your boat manufacturer's instructions for details about appropriate passenger locations in your boat and be sure all passengers are positioned properly before accelerating and when operating above an idle speed. Standing or sitting in non-designated locations may result in being thrown either overboard or within the boat due to waves, wakes, or sudden changes in speed or direction. Even when people are positioned properly, alert your passengers if you must make any unusual maneuver. Always avoid jumping waves or wakes.

EMU33763
Overloading
Do not overload the boat. Consult the boat capacity plate or boat manufacturer for maximum weight and number of passengers. Be sure that weight is properly distributed according to the boat manufacturer's instructions. Overloading or incorrect weight distribution can compromise the boat's handling and lead to an accident, capsizing or swamping.

EMU33773
Avoid collisions
Scan constantly for people, objects, and other boats. Be alert for conditions that limit your visibility or block your vision of others.

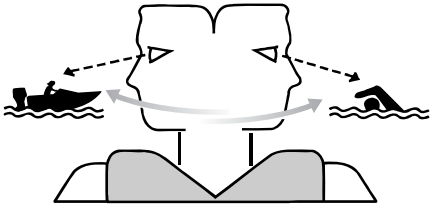

ZMU06025

Operate defensively at safe speeds and keep a safe distance away from people, objects, and other boats.
- Do not follow directly behind other boats or waterskiers.
- Avoid sharp turns or other maneuvers that make it hard for others to avoid you or understand where you are going.
- Avoid areas with submerged objects or shallow water.
- Ride within your limits and avoid aggressive maneuvers to reduce the risk of loss of control, ejection, and collision.
- Take early action to avoid collisions. Remember, boats do not have brakes, and stopping the engine or reducing throttle can reduce the ability to steer. If you are not sure that you can stop in time before hitting an obstacle, apply throttle and turn in another direction.

EMU48100
Collisions with floating or submerged objects
If the outboard motor hits a floating object or an obstacle in the water while cruising, the following could occur:
- The passengers and any loose equipment or luggage could be thrown forward due to the sudden deceleration.
- Parts of the outboard motor could come loose as a result of the impact and could be thrown into the boat.
- The boat or outboard motor could be damaged as a result of the impact.

When you operate the boat in an area where there might be floating objects or obstacles in the water, be sure to adjust the trim angle of the outboard motor, slow down, and operate carefully. For further information, see page 39.

If the outboard motor hits a floating object or an obstacle in the water, make sure that there are no abnormalities with the boat and the outboard motor. If anything abnormal is found, return to the nearest harbor at low speed and have a Yamaha dealer inspect the outboard motor.

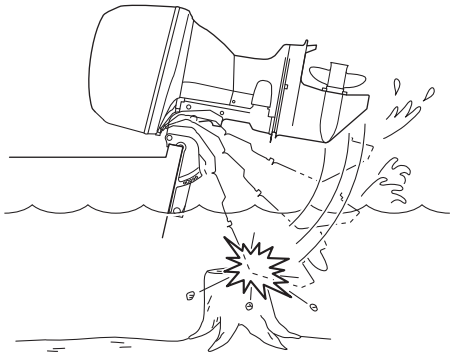

EMU33791
Weather
Stay informed about the weather. Check weather forecasts before boating. Avoid boating in hazardous weather.

EMU33881

Passenger training

Make sure at least one other passenger is trained to operate the boat in the event of an emergency.

EMU33891

Boating safety publications

Be informed about boating safety. Additional publications and information can be obtained from many boating organizations.

EMU33602

Laws and regulations

Know the marine laws and regulations where you will be boating—and obey them. Several sets of rules prevail according to geographic location, but all are basically the same as the International Rules of the Road.

EMU25172

Identification numbers record

EMU25186

Outboard motor serial number

The outboard motor serial number is stamped on the label attached to the port side of the clamp bracket.

Record your outboard motor serial number in the spaces provided to assist you in ordering spare parts from your Yamaha dealer or for reference in case your outboard motor is stolen.

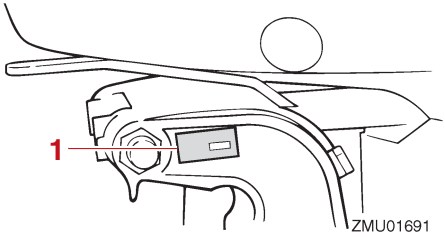

1. Outboard motor serial number location

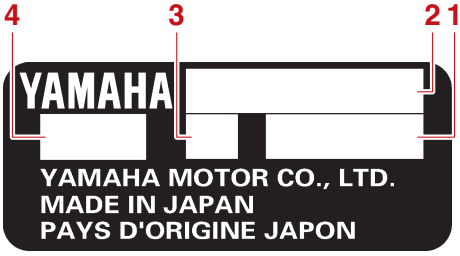

1. Serial number
2. Model name
3. Motor transom height
4. Approved model code

EMU38983

EC Declaration of Conformity (DoC)

This declaration is included with outboard motors that conform to European regulations.

This outboard motor conforms to certain portions of the European Parliament directive relating to machinery.

Each conformed outboard motor accompanied with EC DoC. EC DoC contains the following information;

- Name of engine manufacturer
- Model name
- Product code of model (Approved model code)
- Code of conformed directives

EMU38995

CE Marking

This label is affixed to outboard motors that conform to European regulations.

Outboard motors affixed with this “CE” marking conform with the directives of; 2006/42/EC, 94/25/EC - 2003/44/EC, 2014/30/EU, and 2004/108/EC, 2013/53/EU.

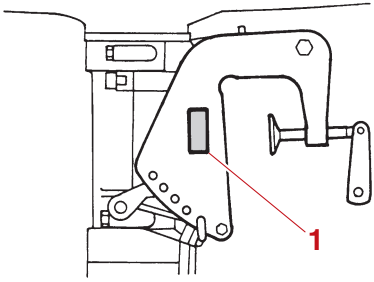

1. CE marking location

YAMAHA MOTOR CO., LTD.
2500 SHINGAI, IWATA,
SHIZUOKA, JAPAN
YAMAHA

ZMU08148

EMU33524

Read manuals and labels

Before operating or working on this outboard motor:

- Read this manual.
- Read any manuals supplied with the boat.
- Read all labels on the outboard motor and the boat.

If you need any additional information, contact your Yamaha dealer.

EMU33836

Warning labels

If these labels are damaged or missing, contact your Yamaha dealer for replacements.

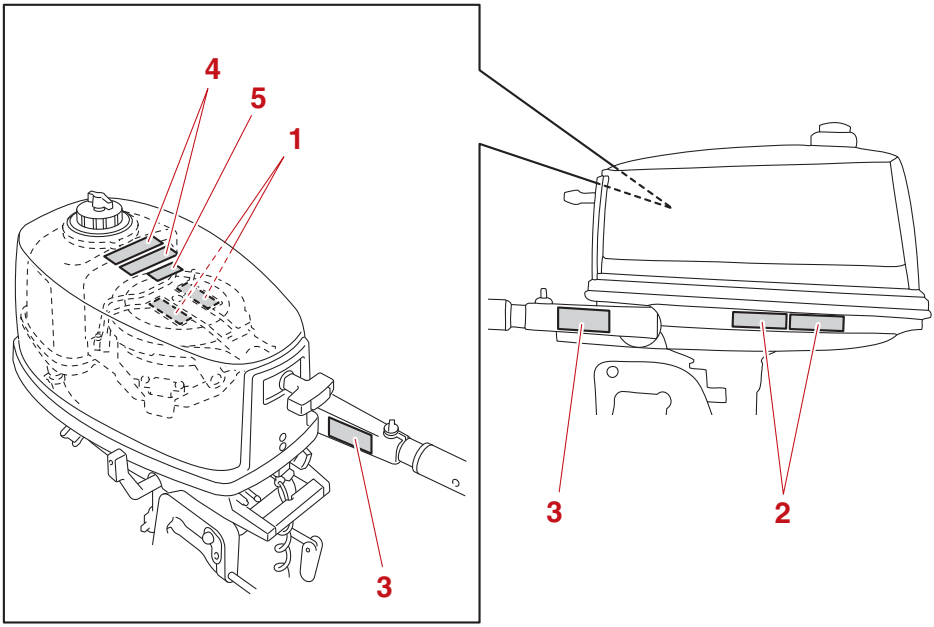

1

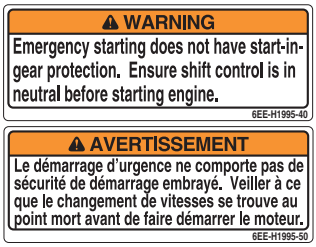

2

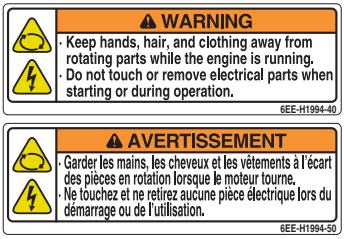

3

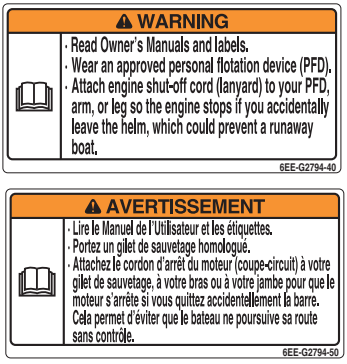

4

EMU35282

Contents of labels

The above warning labels mean as follows.

1

EWM01692

WARNING

Emergency starting does not have start-in-gear protection. Ensure shift control is in neutral before starting engine.

2

EWM01682

WARNING

- **Keep hands, hair, and clothing away from rotating parts while the engine is running.**
- **Do not touch or remove electrical parts when starting or during operation.**

3

EWM01672

WARNING

- **Read Owner's Manuals and labels.**
- **Wear an approved personal flotation device (PFD).**
- **Attach engine shut-off cord (lanyard) to your PFD, arm, or leg so the engine stops if you accidentally leave the helm, which could prevent a runaway boat.**

4

EWM01702

WARNING

Gasoline is highly flammable and explosive. Shut off engine before refueling. Tighten tank cap and air vent screw when not in use.

EMU33851

Other labels

5

EMU35133

Symbols

The following symbols mean as follows.

Notice/Warning

ZMU05696

Read Owner's Manual

ZMU05664

Hazard caused by continuous rotation

ZMU05665

Electrical hazard

ZMU05666

EMU38092

Specifications

TIP:
"(AL)" stated in the specification data below represents the numerical value for the aluminum propeller installed.

EMU48360

Dimension and weight:
Overall length:
677 mm (26.7 in)
Overall width:
322 mm (12.7 in)
Overall height S:
1011 mm (39.8 in)
Overall height L:
1138 mm (44.8 in)
Motor transom height S:
444 mm (17.5 in)
Motor transom height L:
571 mm (22.5 in)
Dry weight (AL) S:
21 kg (46 lb)
Dry weight (AL) L:
22 kg (47 lb)

Performance:
Full throttle operating range:
4500–5500 r/min
Rated power:
2.9 kW (4 HP)
Idle speed (in neutral):
1100–1200 r/min

Power unit:
Type:
2-stroke S1
Total displacement:
103 cm^3 (6.3 c.i.)
Bore × stroke:
54.0 × 45.0 mm (2.13 × 1.77 in)
Ignition system:
CDI
Spark plug with resistor (NGK):
BR7HS
Spark plug gap:
0.6–0.7 mm (0.024–0.028 in)
Steering system:
Tiller handle
Starting system:
Manual starter
Starting carburetion system:
Choke valve
Alternator output:
40/60 W

Lower unit:
Gear shift positions:
Forward-neutral-reverse
Gear ratio:
2.08 (27/13)
Trim and tilt system:
Manual tilt
Propeller mark:
BA

Fuel and oil:
Recommended fuel:
Regular unleaded gasoline
Min. research octane number (RON):
90
Fuel tank capacity:
12 L (3.17 US gal, 2.64 Imp.gal)
Fuel tank capacity (built in type):
2.8 L (0.74 US gal, 0.62 Imp.gal)
Recommended engine oil:
YAMALUBE 2-stroke outboard motor oil

Recommended engine oil:
TC-W3
Gasoline:oil mixing ratio:
100 : 1
Lubrication system:
Pre-mixed fuel and oil

Recommended gear oil:
YAMALUBE outboard gear oil or Hypoid gear oil
Recommended gear oil grade:
SAE 90 API GL-4
Gear oil quantity:
0.100 L (0.106 US qt, 0.088 Imp.qt)

Noise and vibration level:

Operator sound pressure level (ICOMIA 39/94):
81.4 dB(A)
Vibration on tiller handle (ICOMIA 38/94):
6.0 m/s²

EMU33556

Installation requirements

EMU33566

Boat horsepower rating

EWM01561

WARNING

Overpowering a boat can cause severe instability.

Before installing the outboard motor(s), confirm that the total horsepower of your outboard motor(s) does not exceed the boat's maximum horsepower rating. See the boat's capacity plate or contact the manufacturer.

EMU40491

Mounting outboard motor

EWM02501

WARNING

- **Improper mounting of the outboard motor could result in hazardous conditions such as poor handling, loss of control, or fire hazards.**
- **Because the outboard motor is very heavy, special equipment and training is required to mount it safely.**

Your dealer or other person experienced in proper rigging should mount the outboard motor using correct equipment and complete rigging instructions. For further information, see page 21.

EMU25695

Battery requirements

EMU25733

To use the battery

ECM01091

NOTICE

A battery cannot be connected to models that do not have a rectifier or Rectifier Regulator.

If you wish to use a battery, your outboard motor must be equipped with the following parts.

- Rectifier or Rectifier Regulator
- Lighting coil

If you do not know if your outboard motor is equipped with these parts, consult your Yamaha dealer.

Using maintenance-free sealed batteries or gel cell batteries is not recommended because they may not be compatible with Yamaha's charging system for this outboard motor.

Install an optional Rectifier Regulator or use accessories rated to withstand 18 volts or higher with the above models. Consult your Yamaha dealer for details on installing an optional Rectifier Regulator.

EMU34196

Propeller selection

Next to selecting an outboard motor, selecting the right propeller is one of the most important purchasing decisions a boater can make. The type, size, and design of your propeller have a direct impact on acceleration, top speed, fuel economy, and even engine

life. Yamaha designs and manufactures propellers for every Yamaha outboard motor and every application.

Your outboard motor came with a Yamaha propeller selected to perform well over a range of applications, but there may be uses where a different propeller would be more appropriate.

Your Yamaha dealer can help you select the right propeller for your boating needs. Select a propeller that will allow the engine to reach the middle or upper half of the operating range at full throttle with the maximum boat-load. Generally, select a larger pitch propeller for a smaller operating load and a smaller pitch propeller for a heavier load. If you carry loads that vary widely, select the propeller that lets the engine run in the proper range for your maximum load but remember that you may need to reduce your throttle setting to stay within the recommended engine speed range when carrying lighter loads.

To check the propeller, see page 50.

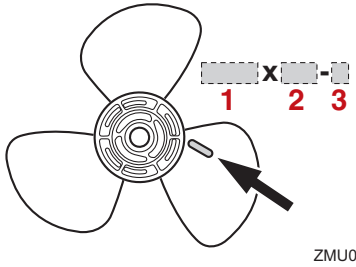

1. Propeller diameter in inches
2. Propeller pitch in inches
3. Type of propeller (propeller mark)

EMU39192

Start-in-gear protection

Yamaha outboard motors are equipped with start-in-gear protection device. This feature permits the engine to be started only when it is in neutral. Always select neutral before starting the engine.

EMU25653

Engine oil requirements

Recommended engine oil:
YAMALUBE 2-stroke outboard motor oil

If the recommended engine oil is not available, another 2-stroke engine oil with an NMMA-certified TC-W3 rating may be used.

EMU48120

Why Yamalube

YAMALUBE oil is a Genuine YAMAHA Part born of the engineers' passion and belief that engine oil is an important liquid engine component. We form teams of specialists in the fields of mechanical engineering, chemistry, electronics and track testing, and have them develop the engine together with the oil it will use. Yamalube oils take full advantage of the base oil's qualities and blend in the ideal balance of additives to make sure the final oil clears our performance standards. Thus, Yamalube mineral, semisynthetic and synthetic oils have their own distinct characters and value. Yamaha's experience gained over many years of research and development into oil since the 1960's helps make Yamalube the best choice for your Yamaha engine.

EMU36361

Fuel requirements

EMU40203

Gasoline

Use a good quality gasoline that meets the minimum octane rating. If knocking or pinging occurs, use a different brand of gasoline or premium unleaded fuel.

Recommended fuel:
Regular unleaded gasoline
Min. research octane number (RON):
90

ECM01982

NOTICE

- **Do not use leaded gasoline. Leaded gasoline can seriously damage the engine.**
- **Avoid getting water and contaminants in the fuel tank. Contaminated fuel can cause poor performance or engine damage. Use only fresh gasoline that has been stored in clean containers.**

TIP:

- This mark identifies the recommended fuel for this outboard motor as specified by European regulation (EN228).
- Check that gasoline nozzle has the same identifier when fueling.

Gasohol

There are two types of gasohol: gasohol containing ethanol (E5 and E10) and that containing methanol. Ethanol can be used if the ethanol content does not exceed 10% and the fuel meets the minimum octane ratings. E85 is a fuel containing 85% ethanol and must not be used in your outboard motor. All ethanol blends containing more than 10% ethanol can cause fuel system damage or cause engine starting and running problems. Yamaha does not recommend gasohol containing methanol because it can cause fuel system damage or engine performance problems.

It is recommended that you install a water-separating marine fuel filter assembly (10 micron minimum) between your boat's fuel tank and outboard motor when using ethanol. Ethanol is known to allow moisture to be absorbed into boat fuel tanks and systems. Moisture in the fuel can cause corrosion of metallic fuel system components, starting and running complaints and require additional fuel system maintenance.

EMU36881

Muddy or acidic water

Yamaha strongly recommends that you have your dealer install the optional chromium-plated water pump kit if you use the outboard motor in muddy or acidic water conditions. However, depending on the model it might not be required.

EMU36331

Anti-fouling paint

A clean hull improves boat performance. The boat bottom should be kept as clean of marine growth as possible. If necessary, the boat bottom can be coated with an anti-fouling paint approved for your area to inhibit marine growth.

Do not use anti-fouling paint which includes copper or graphite. These paints can cause more rapid engine corrosion.

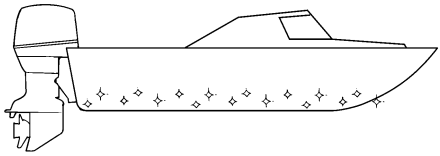

ZMU05176

EMU40302

Outboard motor disposal requirements

Never illegally discard (dump) the outboard motor. Yamaha recommends consulting the dealer about discarding the outboard motor.

EMU36353

Emergency equipment

Keep the following items onboard in case there is trouble with the outboard motor.

- A tool kit with assorted screwdrivers, pliers, wrenches (including metric sizes), and electrical tape.
- Waterproof flashlight with extra batteries.
- An extra engine shut-off cord (lanyard) with clip.
- Spare parts, such as an extra set of spark plugs.

Consult your Yamaha dealer for details.

EMU46722

Components diagram

TIP:

* May not be exactly as shown; also may not be included as standard equipment on all models (order from dealer).

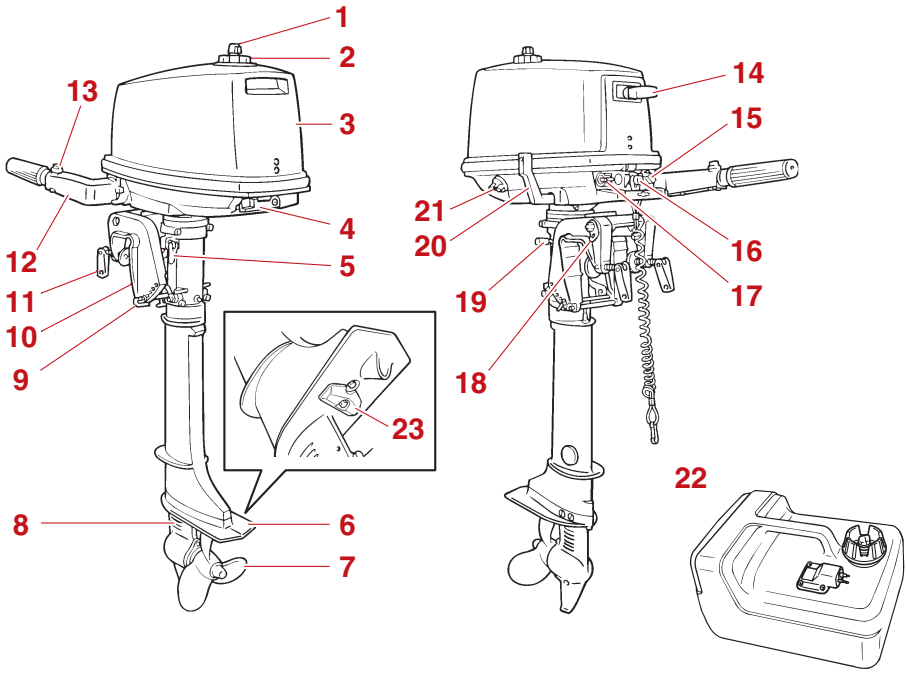

1. Air vent screw
2. Fuel tank cap
3. Top cowling
4. Cowling lock lever
5. Steering friction adjuster
6. Anti-cavitation plate
7. Propeller
8. Cooling water inlet
9. Trim rod
10. Clamp bracket
11. Clamp screw
12. Tiller handle
13. Throttle friction adjuster
14. Manual starter handle
15. Choke knob
16. Engine stop button/Engine shut-off switch
17. Fuel joint
18. Restraint cable attachment
19. Tilt support bar
20. Gear shift lever
21. Fuel cock
22. Fuel tank
23. Anode

EMU25804

Fuel tank

If your model was equipped with a portable fuel tank, its function is as follows.

EWM00021

WARNING

The fuel tank supplied with this engine is its dedicated fuel reservoir and must not be used as a fuel storage container. Commercial users should conform to relevant licensing or approval authority regulations.

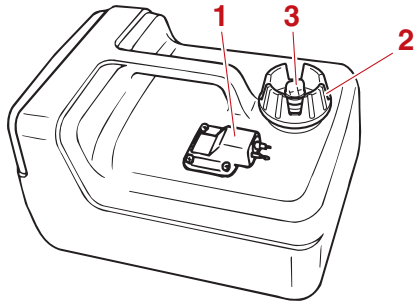

1. Fuel joint
2. Fuel tank cap
3. Air vent screw

EMU25822

Fuel tank

If your model included a fuel tank, its parts and functions are as follows.

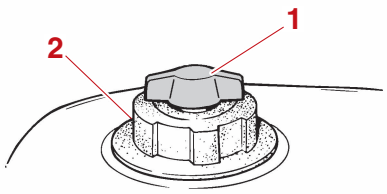

1. Air vent screw
2. Fuel tank cap

EMU25831

Fuel joint

This joint is used to connect the fuel line.

EMU25851

Fuel tank cap

This cap seals the fuel tank. When removed, the tank can be filled with fuel. To remove the cap, turn it counterclockwise.

EMU25861

Air vent screw

This screw is on the fuel tank cap. To loosen the screw, turn it counterclockwise.

EMU25873

Fuel cock

The fuel cock turns on and off the supply of fuel from the fuel tank to the engine.

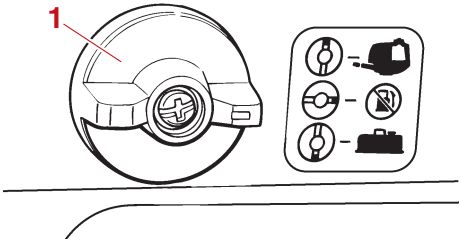

1. Fuel cock

EMU25882

Close

To stop fuel flow to the engine, turn the lever or knob to close position.

Always turn the lever or knob to close position when the engine is not running.

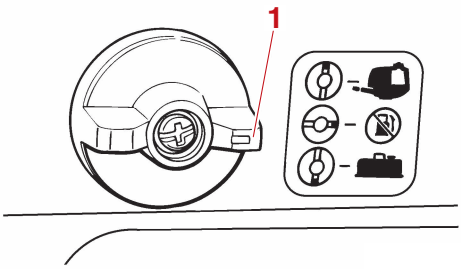

1. Close position

EMU25902

Open

The fuel cock has two open positions, one for selecting fuel flow from the built-in fuel tank, and one for an external tank.

Fuel flows to the carburetor with the lever or knob in either open position. These are the normal running positions.

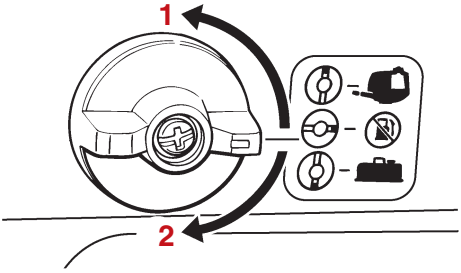

1. “OPEN” position for the built-in tank
2. “OPEN” position for the portable tank

EMU25914

Tiller handle

To change direction, move the tiller handle to the left or right as necessary.

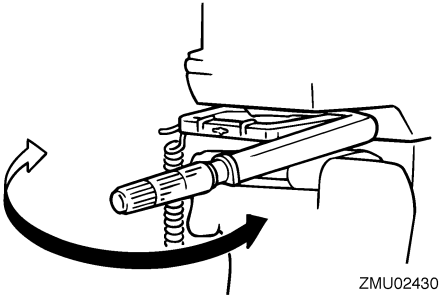

EMU25925

Gear shift lever

Move the gear shift lever forward to engage the forward gear or rearward to engage the reverse gear.

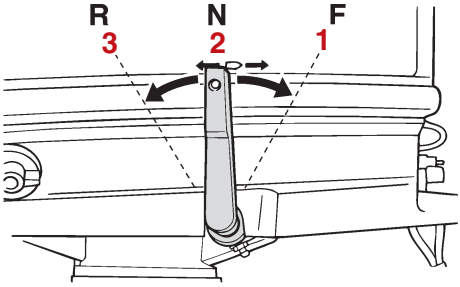

1. Forward “F”
2. Neutral “N”
3. Reverse “R”

EMU25943

Throttle grip

The throttle grip is on the tiller handle. Turn the grip counterclockwise to increase speed and clockwise to decrease speed.

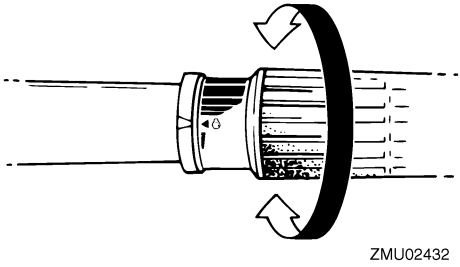

EMU25963

Throttle indicator

The fuel consumption curve on the throttle indicator shows the relative amount of fuel consumed for each throttle position. Choose the setting that offers the best performance and fuel economy for the desired operation.

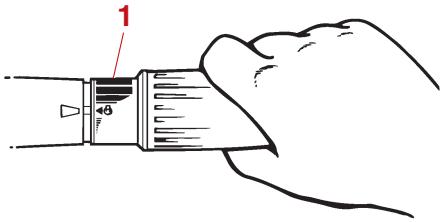

1. Throttle indicator

EMU25978

Throttle friction adjuster

A friction device provides adjustable resistance to movement of the throttle grip or the remote control lever, and can be set according to operator preference.

To increase resistance, turn the adjuster clockwise. To decrease resistance, turn the adjuster counterclockwise. **WARNING! Do not overtighten the friction adjuster. If there is too much resistance, it could be difficult to move the remote control lever or throttle grip, which could result in an accident.** [EWM00033]

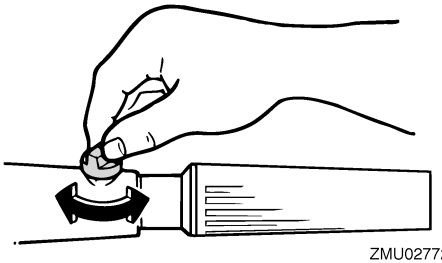

ZMU02772

When constant speed is desired, tighten the adjuster to maintain the desired throttle setting.

EMU25996

Engine shut-off cord (lanyard) and clip

The clip must be attached to the engine shut-off switch for the engine to run. The cord should be attached to a secure place on the operator's clothing, or arm or leg. Should the operator fall overboard or leave the helm, the cord will pull out the clip, stopping ignition to the engine. This will prevent the boat from running away under power. **WARNING! Attach the engine shut-off cord to a secure place on your clothing, or your arm or leg while operating. Do not attach the cord to clothing that could tear loose. Do not route the cord where it could become entangled, preventing it from functioning. Avoid accidentally pulling the cord during normal operation. Loss of engine power means the loss of most steering control. Also, without engine power, the boat could slow rapidly. This could cause people and objects in the boat to be thrown forward.** [EWM00123]

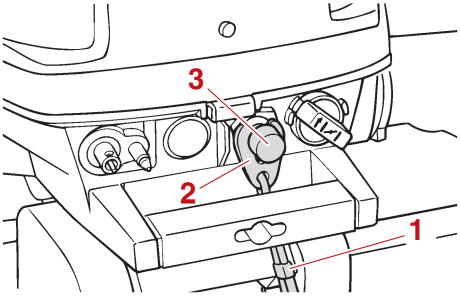

1. Engine shut-off cord (lanyard)
2. Clip
3. Engine shut-off switch

EMU26004

Engine stop button

The engine stop button stops the engine when the button is pushed.

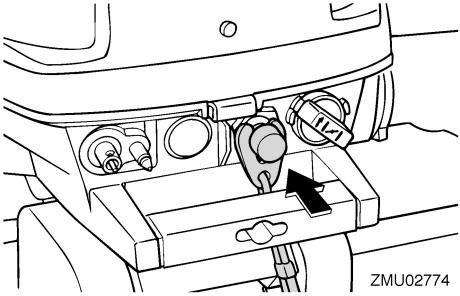

EMU26021

Choke knob

To supply the engine with the rich fuel mixture required to start, turn this knob to the right.

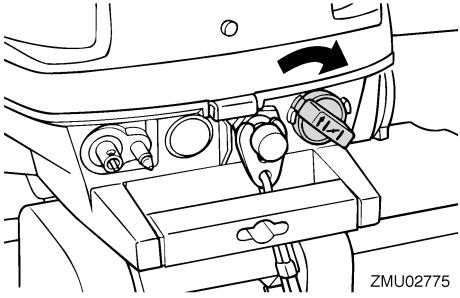

EMU26075

Manual starter handle

The manual starter handle is used to crank and start the engine.

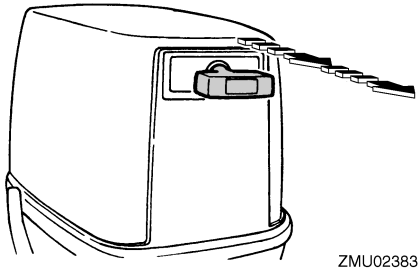

EMU26124

Steering friction adjuster

A friction device provides adjustable resistance to the steering mechanism, and can be set according to operator preference. An adjusting screw or bolt is located on the swivel bracket.

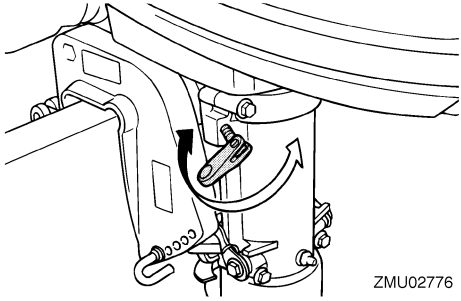

To increase resistance, turn the adjuster clockwise.

To decrease resistance, turn the adjuster counterclockwise.

EWM00041

WARNING

Do not overtighten the friction adjuster. If there is too much resistance, it could be difficult to steer, which could result in an accident.

EMU26263

Trim rod (tilt pin)

The position of the trim rod determines the minimum trim angle of the outboard motor in relation to the transom.

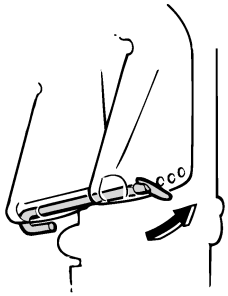

EMU26334

Tilt support bar

The tilt support bar keeps the outboard motor in the tilted up position.

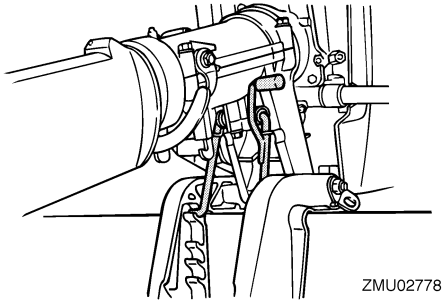

ECM01661

NOTICE

Do not use the tilt support bar when trailering the boat. The outboard motor could shake loose from the tilt support and fall. If the motor cannot be trailered in the normal running position, use an additional support device to secure it in the tilt position.

EMU39264

Cowling lock lever

The cowling lock lever(s) is used to secure the top cowling.

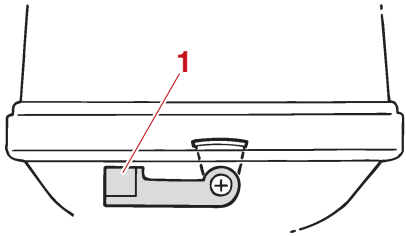

1. Cowling lock lever

EMU26903

Installation

The information presented in this section is intended as reference only. It is not possible to provide complete instructions for every possible boat and motor combination. Proper mounting depends in part on experience and the specific boat and motor combination.

EWM01591

WARNING

- **Overpowering a boat could cause severe instability. Do not install an outboard motor with more horsepower than the maximum rating on the capacity plate of the boat. If the boat does not have a capacity plate, consult the boat manufacturer.**
- **Improper mounting of the outboard motor could result in hazardous conditions such as poor handling, loss of control, or fire hazards. For permanently mounted models, your dealer or other person experienced in proper rigging should mount the motor.**

EMU26912

Mounting the outboard motor

EWM01721

WARNING

Your dealer or other person experienced in proper outboard motor mounting should show you how to mount your outboard motor.

The outboard motor should be mounted so that the boat is well balanced. Otherwise, the boat could be hard to steer. For single-engine boats, mount the outboard motor on the centerline (keel line) of the boat.

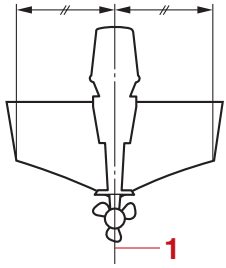

1. Center line (keel line)

EMU26926

Mounting height

To run your boat at optimum efficiency, the water resistance (drag) of the boat and outboard motor must be made as little as possible. The mounting height of the outboard motor greatly affects the water resistance. If the mounting height is too high, cavitation tends to occur, thus reducing the propulsion; and if the propeller tips cut the air, the engine speed will rise abnormally and cause the engine to overheat. If the mounting height is too low, the water resistance will increase and thereby reduce engine efficiency. Mount the outboard motor so that the anti-cavitation plate is between the bottom of the boat and a level 25 mm (1 in) below it.

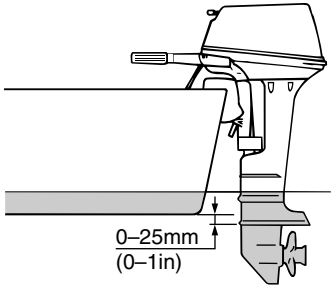

ZMU02011

ECM01635

NOTICE

- **Make sure that the idle hole is high enough to prevent water from entering the engine even if the boat is stationary with the maximum load.**
- **Incorrect engine height or obstructions to the smooth flow of water (such as the design or condition of the boat, or accessories, such as transom ladders or depth finder transducers) can create airborne water spray while the boat is cruising. If the outboard motor is operated continuously in the presence of airborne water spray, enough water could enter the engine through the air intake opening in the top cowling to cause severe engine damage. Remove the cause of the airborne water spray.**

TIP:

- The optimum mounting height of the outboard motor is affected by the boat and motor combination and the desired use. Test runs at different heights can help determine the optimum mounting height. Consult your Yamaha dealer or boat manufacturer for further information on determining the proper mounting height.
- For instructions on setting the trim angle of the outboard motor, see page 36.

EMU26974

Clamping the outboard motor

(1) Place the outboard motor on the transom so that it is positioned as close to the center as possible. Tighten the transom clamp screws evenly and securely. Occasionally check the clamp screws for tightness during operation of the outboard motor because they could become loose due to engine vibration. **WARNING! Loose clamp screws could allow the outboard motor to fall off or move on the transom. This could cause loss of control and serious injury. Make sure the clamp screws are tightened securely. Occasionally check the screws for tightness during operation.**

[EWM00643]

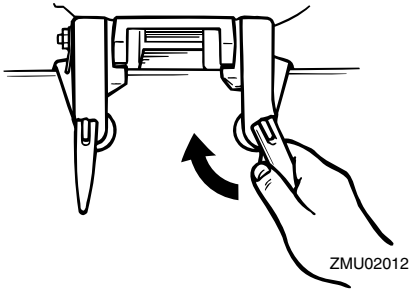

(2) If the restraint cable attachment is equipped on your engine, a restraint cable or chain should be used. Attach one end to the restraint cable attachment and the other to a secure mounting point on the boat. Otherwise the engine could be completely lost if it accidentally falls off the transom.

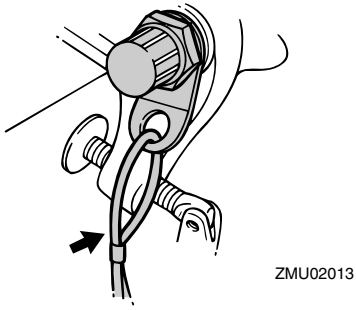

(3) Secure the clamp bracket to the transom using the bolts provided with the outboard (if packed). For details, consult your Yamaha dealer. **WARNING! Avoid using bolts, nuts or washers other**

than those contained in the engine packaging. If used, they must be of at least the same quality of material and strength and must be tightened securely. After tightening, test run the engine and check their tightness.

[EWM00652]

EMU36382

First-time operation

EMU30175

Breaking in engine

Your new engine requires a period of break-in to allow mating surfaces of moving parts to wear in evenly. Correct break-in will help ensure proper performance and longer engine life. ***NOTICE:* Failure to follow the break-in procedure could result in reduced engine life or even severe engine damage.** [ECM00802]

EMU27061

Gasoline and engine oil mixing chart (50:1)

	50:1			
	1 L (0.26 US gal, 0.22 Imp gal)	12 L (3.2 US gal, 2.6 Imp gal)	14 L (3.7 US gal, 3.1 Imp gal)	24 L (6.3 US gal, 5.3 Imp gal)
	0.02L (0.02 US qt, 0.02 Imp qt)	0.24 L (0.25 US qt, 0.21 Imp qt)	0.28 L (0.3US qt, 0.25 Imp qt)	0.48 L (0.51 US qt, 0.42Imp qt)

ZMU02442

1. : Gasoline
2. : Engine oil

ECM00151

NOTICE

Be sure to mix gasoline and oil completely, otherwise the engine may be damaged.

EMU27075

Procedure for pre-mixed models

Run the engine under load (in gear with a propeller installed) for 10 hours as follows.

(1) First 10 minutes:
Run the engine at the lowest possible speed. A fast idle in neutral is best.

(2) Next 50 minutes:
Do not exceed half throttle (approximately 3000 r/min). Vary engine speed occasionally. If you have an easy-planing boat, accelerate at full throttle onto plane, then immediately reduce the throttle to 3000 r/min or less.

(3) Next two hours:
Accelerate at full throttle onto plane, then reduce engine speed to three-quarter throttle (approximately 4000 r/min). Vary engine speed occasionally. Run at full throttle for one minute, then allow about 10 minutes of operation at three-quarter throttle or less to let the engine cool.

(4) Remaining seven hours:
Run the engine at any speed. However, avoid operating at full throttle for more than 5 minutes at a time.

(5) After the first 10 hours:
Operate the engine normally. Use the standard premix ratio of gasoline and oil. For details on mixing fuel and oil, see page 26.

EMU36402

Getting to know your boat

All boats have unique handling characteristics. Operate cautiously while you learn how your boat handles under different conditions and various trim angles (see page 36).

EMU36414

Checks before starting engine

EWM01922

WARNING

If any item in “Checks before starting engine” is not working properly, have it inspected and repaired before operating the outboard motor. Otherwise, an accident could occur.

ECM00121

NOTICE

Do not start the engine out of water. Overheating and serious engine damage can occur.

EMU37142
Fuel level
Be sure you have plenty of fuel for your trip. A good rule is to use 1/3 of your fuel to get to the destination, 1/3 to return, and to keep 1/3 as an emergency reserve. With the boat level on a trailer or in the water, check the fuel level. For fuel filling instructions, see page 26.

EMU36573
Remove the top cowling
For the following checks, remove the top cowling from the bottom cowling. To remove the top cowling, release the cowling lock lever and lift off the top cowling.

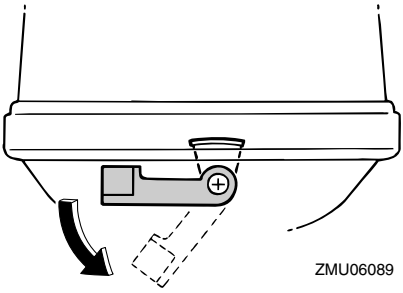
ZMU06089

EMU36443
Fuel system
EWM00061

WARNING

Gasoline and its vapors are highly flammable and explosive. Keep away from sparks, cigarettes, flames, or other sources of ignition.

EWM00911

WARNING

Leaking fuel can result in fire or explosion.
- **Check for fuel leakage regularly.**
- **If any fuel leakage is found, the fuel system must be repaired by a qualified mechanic. Improper repairs can make the outboard unsafe to operate.**

EMU36453
Check for fuel leaks
- Check for fuel leaks or gasoline fumes in the boat.
- Check for fuel leakage from the fuel system.
- Check the fuel tank and fuel lines for cracks, swellings, or other damage.

EMU36893
Controls
- Move the tiller handle fully to the left and right to make sure operation is smooth.
- Turn the throttle grip from the fully closed to the fully open position. Make sure that it turns smoothly and that it completely returns to the fully closed position.
- Look for loose or damaged connections of the throttle and shift cables.

EMU36484
Engine shut-off cord (lanyard)
Inspect the engine shut-off cord and clip for damage, such as cuts, breaks, and wear.

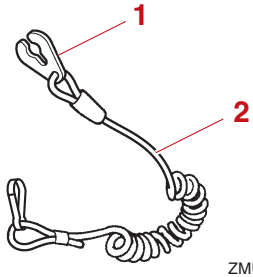

ZMU06873

1. Clip
2. Engine shut-off cord (lanyard)

EMU27121
Oil
- Check to be sure you have plenty of oil for your trip.

EMU27142
Engine
- Check the engine and engine mounting.

- Look for loose or damaged fasteners.
- Check the propeller for damage.

EMU36956
Install top cowling

(1) Be sure that the cowling lock lever is released.
(2) Be sure that the rubber seal is seated all the way around the top cowling.
(3) Place the top cowling on the bottom cowling.
(4) Check to be sure the rubber seal is seated correctly between the top cowling and the bottom cowling.
(5) Move the cowling lock lever to lock the top cowling as shown. ***NOTICE:*** **If the top cowling is not installed correctly, water spray under the top cowling can damage the engine, or the top cowling can blow off at high speeds.** [ECM01992]

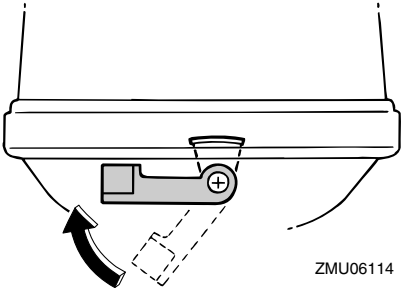

After installing, check the fitting of the top cowling by pushing it with both hands. If the top cowling is loose, have it repaired by your Yamaha dealer.

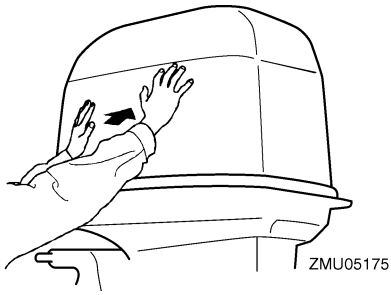

EMU27235
Filling fuel and engine oil

EMU2724A
Filling fuel for portable tank

EWM01831
WARNING

- **Gasoline and its vapors are highly flammable and explosive. Always refuel according to this procedure to reduce the risk of fire and explosion.**
- **Gasoline is poisonous and can cause injury or death. Handle gasoline with care. Never siphon gasoline by mouth. If you should swallow some gasoline or inhale a lot of gasoline vapor, or get some gasoline in your eyes, see your doctor immediately. If gasoline spills on your skin, wash with soap and water. If gasoline spills on your clothing, change your clothes.**

(1) Be sure the engine is stopped.
(2) Disconnect the fuel line from the fuel tank and tighten the air vent screw on the fuel tank cap.

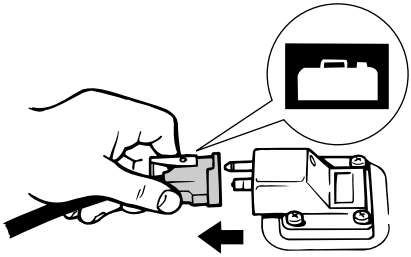

ZMU06621

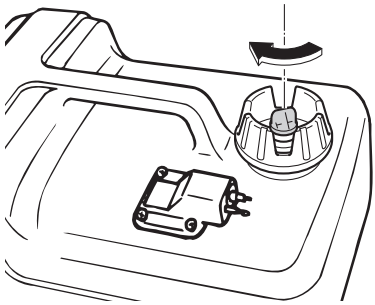

(3) Remove the portable tank from the boat.
(4) Be sure you are in a well-ventilated outdoor area, either securely moored or trailered.
(5) Do not smoke and keep away from sparks, flames, static electric discharge, or other sources of ignition.
(6) If you use a portable container to store and dispense fuel, use only an approved GASOLINE container.
(7) Touch the fuel nozzle to the filler opening or funnel to help prevent electrostatic sparks.
(8) Fill the fuel tank, but do not overfill. **WARNING! Do not overfill. Otherwise fuel can expand and overflow if the temperature increases.** [EWM02611]

Fuel tank capacity:
12 L (3.17 US gal, 2.64 Imp.gal)

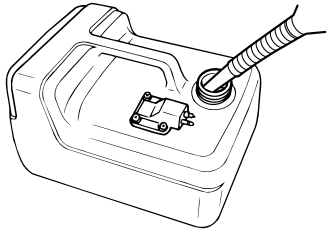

ZMU04484

(9) Tighten the filler cap securely.
(10) Wipe up any spilled gasoline immediately with dry rags. Dispose of rags properly according to local laws or regulations.

EMU27258

Filling fuel for built-in tank

EWM01951

WARNING

Be sure the outboard motor is securely fastened to the transom or a stable stand.

EWM01831

WARNING

- **Gasoline and its vapors are highly flammable and explosive. Always refuel according to this procedure to reduce the risk of fire and explosion.**
- **Gasoline is poisonous and can cause injury or death. Handle gasoline with care. Never siphon gasoline by mouth. If you should swallow some gasoline or inhale a lot of gasoline vapor, or get some gasoline in your eyes, see your doctor immediately. If gasoline spills on your skin, wash with soap and water. If gasoline spills on your clothing, change your clothes.**

(1) Be sure the engine is stopped.
(2) Be sure you are in a well-ventilated outdoor area, either securely moored or trailered.

(3) Do not smoke and keep away from sparks, flames, static electric discharge, or other sources of ignition.
(4) If you use a portable container to store and dispense fuel, only use a locally approved GASOLINE container.
(5) Touch the fuel nozzle to the filler opening or funnel to help prevent electrostatic sparks.
(6) Fill fuel to the upper fuel level mark on the fuel tank. Do not overfill. **WARNING! Do not overfill. Otherwise fuel can expand and overflow if the temperature increases.** [EWM02611]

Fuel tank capacity:
2.8 L (0.74 US gal, 0.62 Imp.gal)

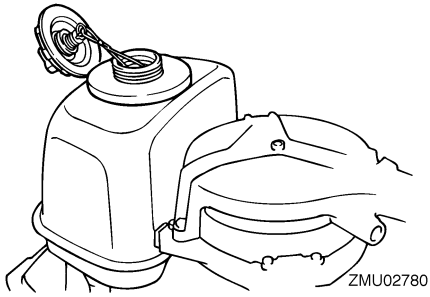

(7) Tighten the filler cap securely.
(8) Wipe up any spilled gasoline immediately with dry rags. Dispose of rags properly according to local laws or regulations.

EMU27407
Gasoline and oil mixing (100:1)

ECM00812
NOTICE

- **Avoid using any oil other than the specified type.**
- **Use a thoroughly blended fuel-oil mixture.**
- **If the mixture is not thoroughly mixed, or if the mixing ratio is incorrect, the following problems could occur.**
- **Low oil ratio: Lack of oil could cause major engine trouble, such as piston seizure.**
- **High oil ratio: Too much oil could cause fouled spark plugs, smoky exhaust, and heavy carbon deposits.**

	Gasoline to engine oil ratio
Break-in period	See page 24
After break-in	100:1

	100:1			
⛽	1 L (0.26 US gal, 0.22 Imp gal)	12 L (3.2 US gal, 2.6 Imp gal)	14 L (3.7 US gal, 3.1 Imp gal)	24 L (6.3 US gal, 5.3 Imp gal)
🛢	0.01 L (0.01 US qt, 0.01 Imp qt)	0.12 L (0.13 US qt, 0.11 Imp qt)	0.14 L (0.15 US qt, 0.12 Imp qt)	0.24 L (0.25 US qt, 0.21 Imp qt)

ZMU04910

1. ⛽: Gasoline
2. 🛢: Engine oil

<u>If equipped with a portable fuel tank</u>

(1) Pour oil into the portable fuel tank, and then add gasoline.

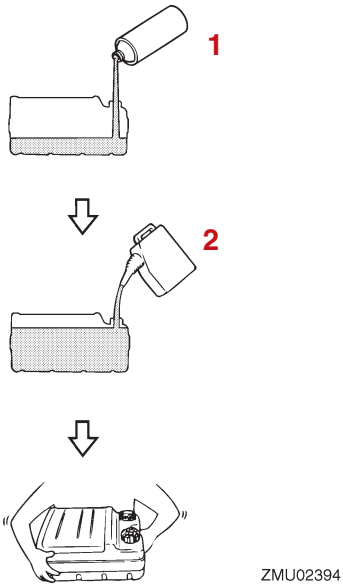

1. Engine oil
2. Gasoline

(2) Replace the fuel tank cap and close tightly.
(3) Shake the fuel tank to mix the fuel thoroughly.
(4) Make sure that the oil and gasoline are mixed.

<u>If equipped with a built-in fuel tank</u>

(1) Pour oil into a clean fuel can, and then add gasoline.

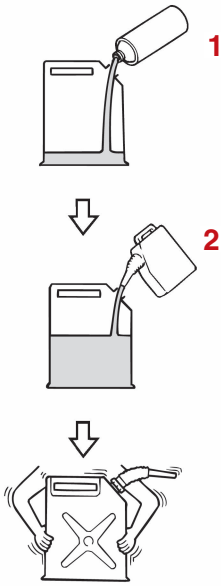

1. Engine oil
2. Gasoline

(2) Replace the fuel can cap and close tightly.
(3) Shake the fuel can to mix the fuel thoroughly.
(4) Make sure that the oil and gasoline are mixed.
(5) Pour the gasoline and oil mixture into the built-in fuel tank.

TIP:

If using a permanently installed tank, pour the oil gradually as the gasoline is being added to the tank.

EMU27453

Operating engine

EWM00421

WARNING

- **Before starting the engine, make sure that the boat is tightly moored and that you can steer clear of any obstructions. Be sure there are no swimmers in the water near you.**
- **When the air vent screw is loosened, gasoline vapor will be released. Gasoline is highly flammable, and its vapors are flammable and explosive. Refrain from smoking, and keep away from open flames and sparks while loosening the air vent screw.**
- **This product emits exhaust gases which contain carbon monoxide, a colorless, odorless gas which could cause brain damage or death when inhaled. Symptoms include nausea, dizziness, and drowsiness. Keep cockpit and cabin areas well ventilated. Avoid blocking exhaust outlets.**

EMU2746B

Sending fuel (portable tank)

(1) If there is an air vent screw on the fuel tank cap, loosen it 2 or 3 turns.

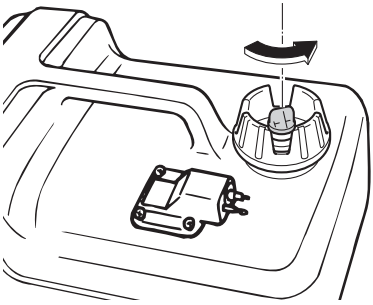

(2) If there is a fuel joint on the motor, align the fuel joint on the fuel line with the fuel joint on the motor and firmly connect the fuel line to the joint while pinching the joint. Then firmly connect the other end of the fuel line to the joint on the fuel tank.

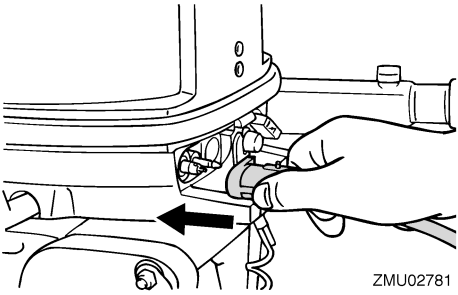

ZMU02781

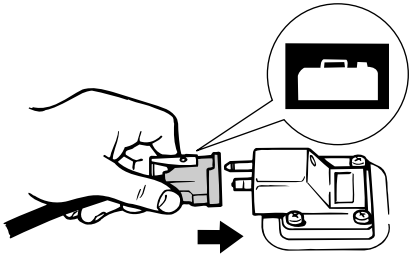

ZMU02024

TIP:

Wipe up any spilled gasoline immediately with dry rags. Dispose of rags properly according to local laws or regulations.

(3) Squeeze the primer pump, with the arrow pointing up, until you feel it become firm. During engine operation, place the tank horizontally, otherwise fuel cannot be drawn from the fuel tank.

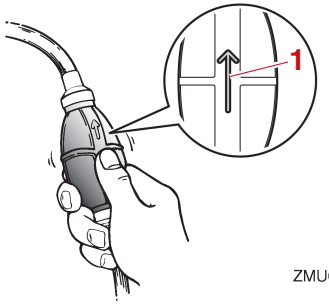

ZMU02025

1. Arrow

EMU27477

Sending fuel

(1) For the built in tank, loosen the air vent screw on the fuel tank cap by one turn. For the external fuel tank, loosen it on the fuel tank cap by 2 or 3 turns.

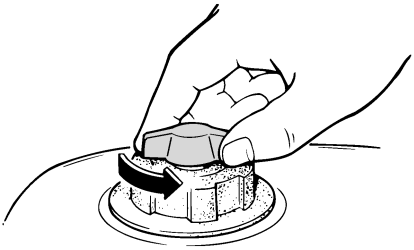

ZMU02443

(2) Select the fuel tank using the fuel cock or open the fuel cock.

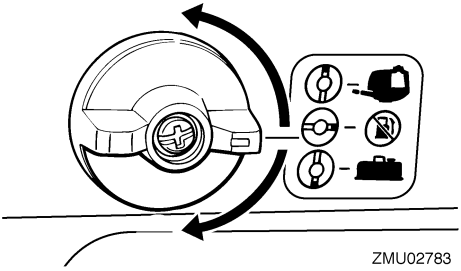

ZMU02783

(3) If you are using an external fuel tank, align the fuel joint on the fuel line with the fuel joint on the motor and connect the fuel joints securely while pinching the joint. Then squeeze the primer pump, with the arrow pointing up, until you feel it become firm (if equipped the fuel joint).

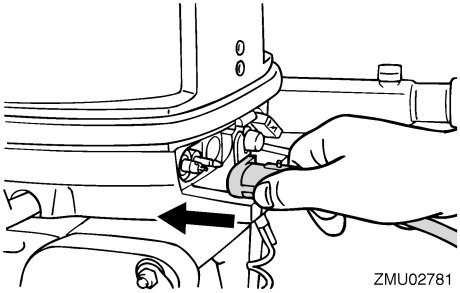

ZMU02781

EMU27495

Starting engine

EWM01601

WARNING

Before starting the engine, make sure that the boat is tightly moored and that you can steer clear of any obstructions. Be sure there are no swimmers in the water near you.

EMU2750A

Manual start models (tiller control)

EWM01842

WARNING

- **Failure to attach the engine shut-off cord could result in a runaway boat if operator is ejected. Attach the engine shut-off cord to a secure place on your clothing, or your arm or leg while operating. Do not attach the cord to clothing that could tear loose. Do not route the cord where it could become entangled, preventing it from functioning.**

- **Avoid accidentally pulling the cord during normal operation. Loss of engine power means the loss of most steering control. Also, without engine power, the boat could slow rapidly. This could cause people and objects in the boat to be thrown forward.**

(1) Place the gear shift lever in neutral.

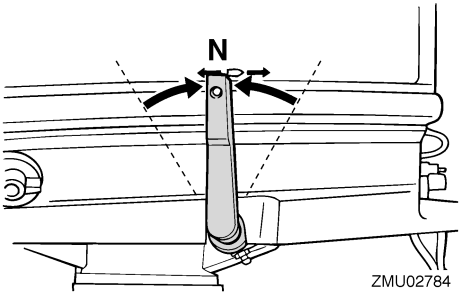

TIP:
The start-in-gear protection device prevents the engine from starting except when in neutral.

(2) Attach the engine shut-off cord to a secure place on your clothing, or your arm or leg. Then install the clip on the other end of the cord into the engine shut-off switch.

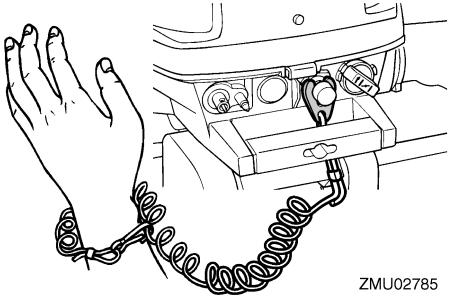

(3) Place the throttle grip in the "START" (start) position.

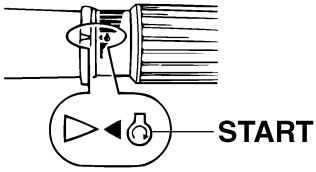

(4) Pull out / turn the choke knob fully. After the engine starts, replace / return the knob to the home position.

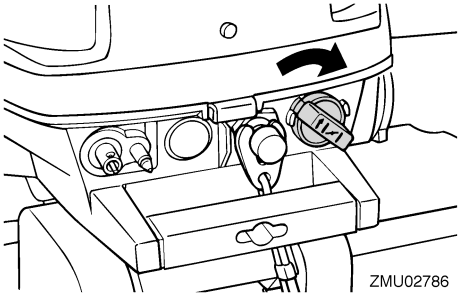

TIP:
- It is not necessary to use the choke when starting a warm engine.
- If the choke knob is left in the "START" (start) position while the engine is running, the engine will run poorly or stall.

(5) Pull the manual starter handle slowly until you feel resistance. Then give a strong pull straight out to crank and start the engine. Repeat if necessary.

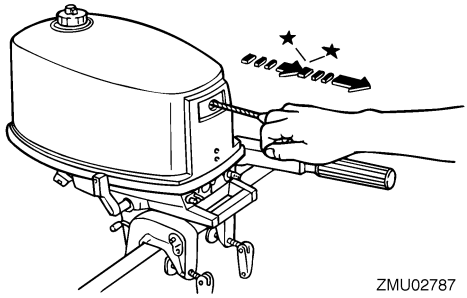
ZMU02787

(6) After the engine starts, slowly return the manual starter handle to its original position before releasing it.
(7) Slowly return the throttle grip to the fully closed position.

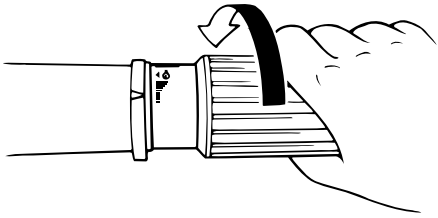
ZMU02030

TIP:
- When the engine is cold, it needs to be warmed up. For further information, see page 33.
- If the engine does not start on the first try, repeat the procedure. If the engine fails to start after 4 or 5 tries, open the throttle a small amount (between 1/8 and 1/4) and try again. Also if the engine is warm and fails to start, open the throttle a same amount and try to start the engine again. If the engine still fails to start, see page 54.

EMU36511
Checks after starting engine

EMU36524
Cooling water
Check for a steady flow of water from the cooling water pilot hole. A continuous flow of water from the pilot hole indicates that the water pump is pumping water through the cooling water passages. If the cooling water passages are frozen, it may take a while for water to start flowing out of the pilot hole.

ECM01811
NOTICE

If water is not flowing out of the pilot hole at all times while the engine is running, overheating and serious damage could occur. Stop the engine and check whether the cooling water inlet on the lower case or the cooling water pilot hole is blocked. Consult your Yamaha dealer if the problem cannot be located and corrected.

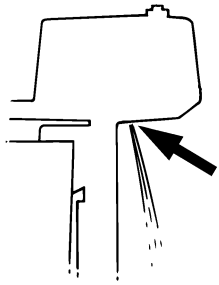
ZMU02447

EMU27671
Warming up engine

EMU27685
Choke start models
After starting the engine, allow it to idle for 3 minutes to warm up. ***NOTICE:*** **Failure to do so will shorten engine life.** [ECM04550] Gradually return the choke knob to its home position as the engine warms up.

EMU36532
Checks after engine warm up

EMU36542
Shifting
While the boat is tightly moored, and without applying throttle, confirm that the engine shifts smoothly into forward and reverse, and back to neutral.

EMU36973
Stop switches
Perform the following procedure to check that the engine stop button and engine shut-off switch operate properly.
- Start the engine, and then check that the engine stops when the engine stop button is pushed.
- Restart the engine, and then check that the engine stops when the clip is pulled from the engine shut-off switch.
- Check that the engine cannot be started with the clip removed from the engine shut-off switch.

EMU34611
Shifting

EWM00181
WARNING

Before shifting, make sure there are no swimmers or obstacles in the water near you.

ECM01611
NOTICE

Warm up the engine before shifting into gear. Until the engine is warm, the idle speed may be higher than normal. High idle speed can prevent you from shifting back to neutral. If this occurs, stop the engine, shift to neutral, then restart the engine and allow it to warm up.

To shift out of neutral

Move the gear shift lever firmly and crisply forward (for forward gear) or backward (for reverse gear).

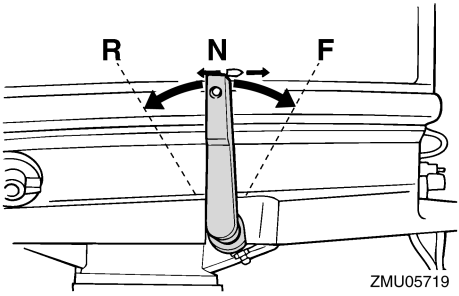

To shift from in gear (forward/reverse) to neutral

(1) Close the throttle so that the engine slows to idle speed.

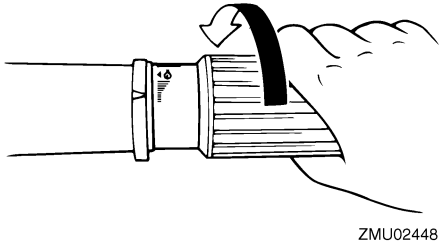

(2) After the engine is at idle speed in gear move the gear shift lever firmly and crisply into the neutral position.

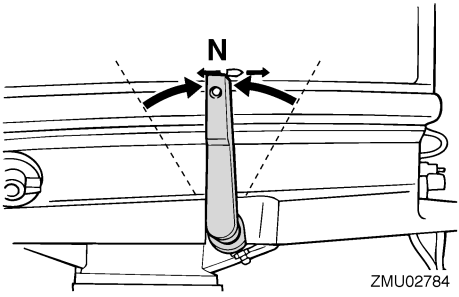

TIP:
The outboard motor can turn 360° in its bracket (full-pivot system). The boat can also be backed up by simply turning the outboard motor around 180° with the steering handle facing toward you.

EMU31743

Stopping boat

EWM01511

WARNING

- **Do not use the reverse function to slow down or stop the boat as it could cause you to lose control, be ejected, or impact the steering wheel or other parts of the boat. This could increase the risk of serious injury. It could also damage the shift mechanism.**
- **Do not shift into reverse while traveling at planing speeds. Loss of control, boat swamping, or damage to the boat could occur.**

The boat is not equipped with a separate braking system. Water resistance stops it after the throttle lever is moved back to idle. The stopping distance varies depending on gross weight, water surface conditions, and wind direction.

EMU27822

Stopping engine

Before stopping the engine, first let it cool off for a few minutes at idle or low speed. Stopping the engine immediately after operating at high speed is not recommended.

EMU27835

Procedure

(1) Push and hold the engine stop button until the engine comes to a complete stop.

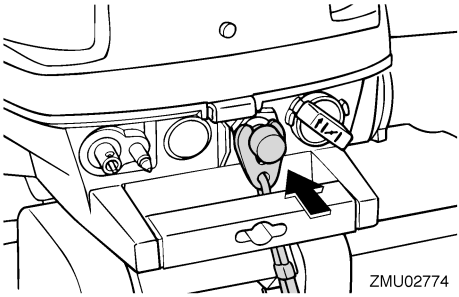
ZMU02774

(2) After stopping the engine, tighten the air vent screw on the fuel tank cap and set the fuel cock lever or knob to the closed position, if equipped.

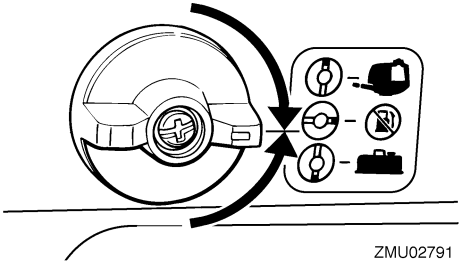
ZMU02791

(3) Disconnect the fuel line if you are using an external fuel tank.

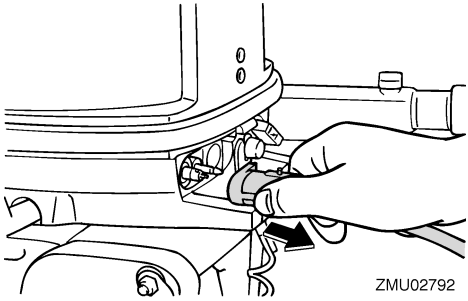
ZMU02792

TIP:
If the outboard motor is equipped with an engine shut-off cord, the engine can also be stopped by pulling the cord and removing the clip from the engine shut-off switch.

EMU27865

Trimming outboard motor

EWM00741

WARNING

Excessive trim for the operating conditions (either trim up or trim down) can cause boat instability and can make steering the boat more difficult. This increases the possibility of an accident. If the boat begins to feel unstable or is hard to steer, slow down and/or readjust the trim angle.

The trim angle of the outboard motor helps determine the position of the bow of the boat in the water. Correct trim angle will help improve performance and fuel economy while reducing strain on the engine. Correct trim angle depends upon the combination of boat, engine, and propeller. Correct trim is also affected by variables such as the load in the boat, sea conditions, and running speed.

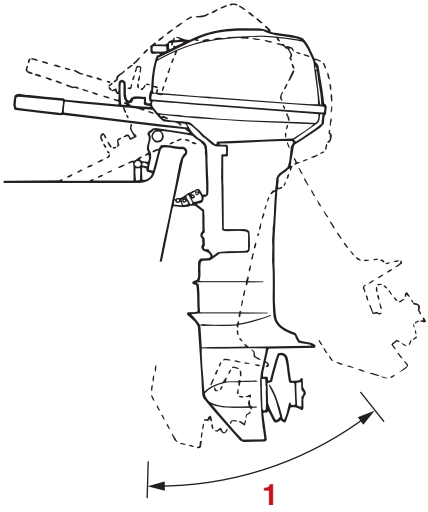

1. Trim operating angle

EMU27873

Adjusting trim angle for manual tilt models

There are 4 or 5 holes provided in the clamp bracket to adjust the outboard motor trim angle.

(1) Stop the engine.

(2) Tilt the outboard motor up, and then remove the trim rod from the clamp bracket.

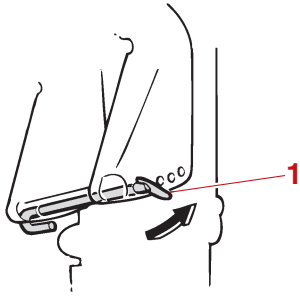

1. Trim rod

(3) Reposition the rod in the desired hole.

To raise the bow (“trim-out”), move the rod away from the transom.

To lower the bow (“trim-in”), move the rod toward the transom.

Make test runs with the trim set to different angles to find the position that works best for your boat and operating conditions.

EWM00401

WARNING

- **Stop the engine before adjusting the trim angle.**
- **Use care to avoid being pinched when removing or installing the rod.**
- **Use caution when trying a trim position for the first time. Increase speed gradually and watch for any signs of instability or control problems. Improper trim angle can cause loss of control.**

TIP:
The outboard motor trim angle can be changed approximately 4 degrees by shifting the trim rod one hole.

EMU27913
Adjusting boat trim
When the boat is on plane, a bow-up attitude results in less drag, greater stability and efficiency. This is generally when the keel line of the boat is up about 3 to 5 degrees. With the bow up, the boat may have a greater tendency to steer to one side or the other. Compensate for this as you steer. When the bow of the boat is down, it is easier to accelerate from a standing start onto plane.

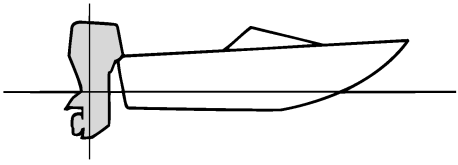

ZMU01784

Bow Up
Too much trim-out puts the bow of the boat too high in the water. Performance and economy are decreased because the hull of the boat is pushing the water and there is more air drag. Excessive trim-out can also cause the propeller to ventilate, which reduces performance further, and the boat may “porpoise” (hop in the water), which could throw the operator and passengers overboard.

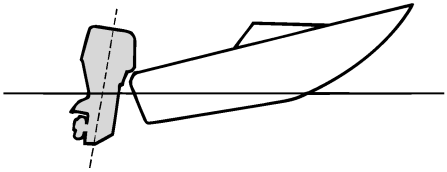

ZMU01785

Bow Down
Too much trim-in causes the boat to “plow” through the water, decreasing fuel economy and making it hard to increase speed. Operating with excessive trim-in at higher speeds also makes the boat unstable. Resistance at the bow is greatly increased, heightening the danger of “bow steering” and making operation difficult and dangerous.

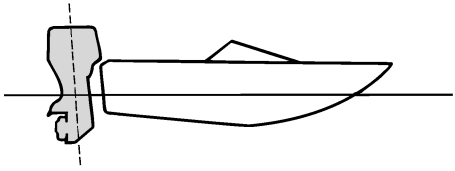

ZMU01786

TIP:
Depending on the type of boat, the outboard motor trim angle may have little effect on the trim of the boat when operating.

EMU27924
Tilting up and down
If the engine will be stopped for some time or if the boat is moored in shallows, the outboard motor should be tilted up to protect the propeller and lower casing from damage by collision with obstructions, and also to reduce salt corrosion.

EWM00223

WARNING

Make sure that no one is near the outboard motor when tilting the outboard motor up or down. Otherwise, body parts could be crushed between the outboard motor and the clamp bracket.

EWM00231

WARNING

Leaking fuel is a fire hazard. Tighten the air vent screw and place the fuel cock in the closed position if the outboard motor will be tilted for more than a few minutes. Otherwise fuel may leak.

ECM00232

NOTICE

- **Before tilting the outboard motor, follow the procedure under "Stopping engine" in this chapter. Never tilt the outboard motor while the engine is running. Severe damage from overheating can result.**
- **Do not tilt up the engine by pushing the tiller handle because this could break the handle.**
- **Keep the power unit higher than the propeller at all times. Otherwise water could run into the cylinder and cause damage.**
- **The outboard motor cannot be tilted when in reverse or when the outboard motor is turned 180° (facing the rear).**

EMU34621

Procedure for tilting up (manual tilt models)

(1) Place the gear shift lever in neutral and face the outboard motor forward.

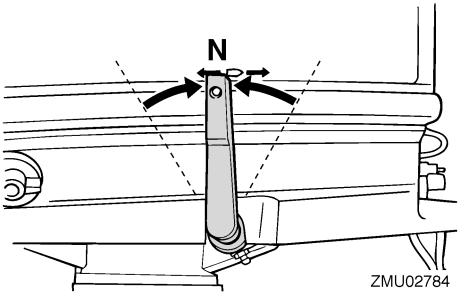

ZMU02784

(2) Tighten the steering friction adjuster by turning it clockwise to prevent the motor from turning freely.

(3) Tighten the air vent screw.

ZMU02450

(4) Close the fuel cock.

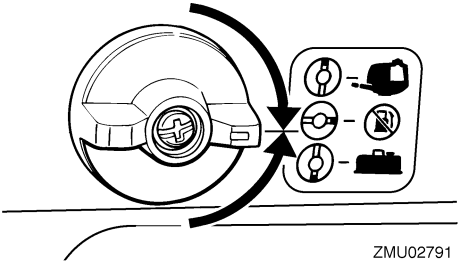

ZMU02791

(5) Hold the rear of the top cowling or the rear handle (if equipped) with one hand and tilt the outboard motor up fully until the tilt support bar automatically locks.

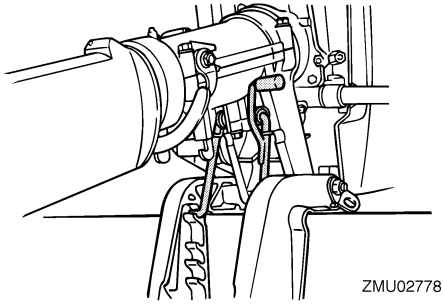

ECM01671

NOTICE

Do not use the tilt support bar when trailering the boat. The outboard motor could shake loose from the tilt support and fall. If the motor cannot be trailered in the normal running position, use an additional support device to secure it in the tilt position. For more detailed information, see page 42.

TIP:

If the motor is not facing forward, the tilt support bar cannot automatically turn to the locked position. If the tilt support bar does not automatically lock, swing the motor a little to the left and right.

EMU28034

Procedure for tilting down (manual tilt models)

(1) Slightly tilt the outboard motor up.

(2) If equipped with the tilt support bar: Slowly tilt the outboard motor down while pulling the tilt support bar lever up.

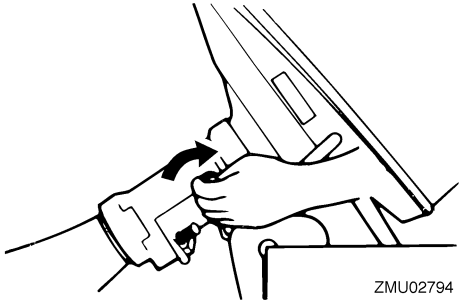

(3) If equipped with the tilt support knob: Pull the knob out, and then slowly tilt the outboard motor down.

(4) If equipped with the tilt support lever: Slowly tilt the outboard motor down while pulling the tilt support lever up.

(5) Loosen the steering friction adjuster by turning it counterclockwise, and adjust the steering friction according to operator preference. **WARNING! If there is too much resistance it could be difficult to steer, which could result in an accident.** [EWM00722]

EMU28063

Shallow water

EMU35692

Cruising in shallow water (manual tilt models)

EWM00712

WARNING

- **Run the boat at the lowest possible speed when using the shallow water cruising system. The tilt lock mechanism does not work while the shallow water cruising system is being used. Hitting an underwater obstacle could cause the outboard motor to lift out of the water, resulting in loss of control.**

- **Do not rotate the outboard motor 180° and operate the boat in reverse. Place the gear shift in reverse to operate the boat in reverse.**
- **Use extra care when operating in reverse. Too much reverse thrust can cause the outboard motor to lift out of the water, increasing the chance of accident and personal injury.**

ECM00261

NOTICE

Do not tilt the outboard motor up so that the cooling water inlet on the lower unit is above the surface of the water when setting up for and cruising in shallow water. Otherwise severe damage from overheating can result.

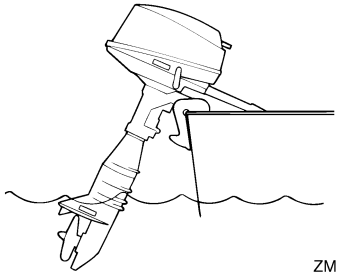

ZMU02456

EMU28103

Procedure

(1) Place the gear shift lever in neutral and face the outboard motor forward.

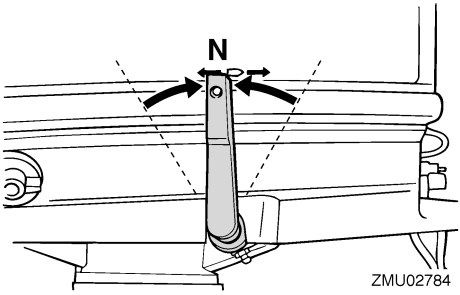

ZMU02784

(2) Slightly tilt the outboard motor up until the tilt support bar automatically turns to the lock position to support the engine. The outboard motor is equipped with 2 or 3 positions for shallow water cruising.

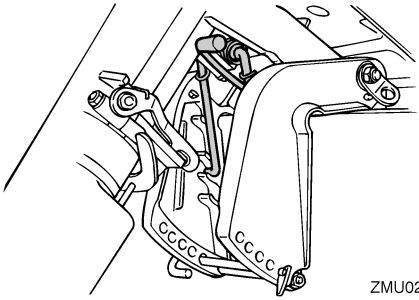

ZMU02795

(3) To lower the outboard motor to the normal running position, first slightly tilt the outboard motor up. Then pull up the tilt support bar lever and slowly tilt the engine down.

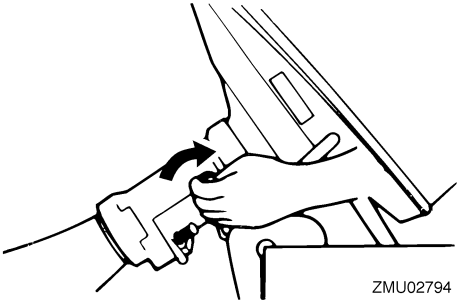

ZMU02794

EMU28196

Cruising in other conditions

Cruising in salt water

After operating in salt water, flush the cooling water passages with fresh water to prevent them from becoming clogged. Also rinse the outside of the outboard motor with fresh water.

Cruising in muddy, turbid, or acidic water

Yamaha strongly recommends that you use the optional chromium-plated water pump kit (see page 13) if you use the outboard motor

in acidic water or water with a lot of sediment in it, such as muddy or turbid (cloudy) water. After operating in such water, flush the cooling passages with fresh water to prevent corrosion. Also rinse the outside of the outboard motor with fresh water.

EMU2822B

Transporting and storing outboard motor

EWM02621

WARNING

- **USE CARE when transporting fuel tank, whether in a boat or car.**
- **DO NOT fill fuel container to maximum capacity. Gasoline will expand considerably as it warms up and can build up pressure in the fuel container. This can cause fuel leakage and a potential fire hazard.**
- **Leaking fuel is a fire hazard. When transporting and storing the outboard motor, disconnect the fuel line from the outboard motor to prevent fuel from leaking.**
- **Never get under the outboard motor while it is tilted. Severe injury could occur if the outboard motor accidentally falls.**
- **Do not use the tilt support lever or knob when trailering the boat. The outboard motor could shake loose from the tilt support and fall. If the outboard motor cannot be trailered in the normal running position, use an additional support device to secure it in the tilt position.**

ECM02441

NOTICE

When storing the outboard motor for prolonged time, fuel must be drained from the fuel tank. The deteriorated fuel could clog the fuel line causing engine start difficulty or malfunction.

When storing or transporting the outboard motor, make sure to follow the procedure listed below.

- Disconnect the fuel line from the outboard motor.
- Tighten the fuel tank cap and its air vent screw.
- When the outboard motor is tilted prolonged time for mooring or trailering the boat, disconnect the fuel line from the outboard motor. Tighten the fuel tank cap and its air vent screw.

The outboard motor should be transported and stored in the normal running position. If there is insufficient road clearance in this position, then trailer the outboard motor in the tilt position using a motor support device such as a transom saver bar. Consult your Yamaha dealer for further details.

EMU28237

Clamp screw mounting models

When transporting or storing the outboard motor while removed from a boat, keep the outboard motor in the attitude shown.

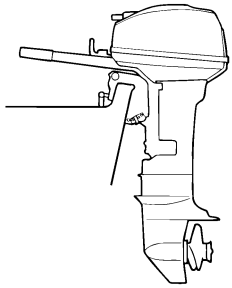

ZMU02796

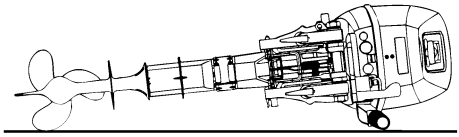

ZMU02458

TIP:
Place a towel or something similar under the outboard motor to protect it from damage.

EMU30273
Storing outboard motor
When storing your Yamaha outboard motor for prolonged periods of time (2 months or longer), several important procedures must be performed to prevent excessive damage. It is advisable to have your outboard motor serviced by an authorized Yamaha dealer prior to storage. However, you, the owner, with a minimum of tools, can perform the following procedures.

ECM01412
NOTICE

- **Do not place the outboard motor on its side before the cooling water has drained from it completely, otherwise water may enter the cylinder through the exhaust port and cause engine trouble.**
- **Store the outboard motor in a dry, well-ventilated place, not in direct sunlight.**

EMU28306
Procedure
EMU28316
Flushing in a water tank
(1) Wash the outboard motor body using fresh water. ***NOTICE:* Do not spray water into the air intake.** [ECM01841] For further information, see page 44.
(2) Place the fuel cock in the closed position and disconnect the fuel line if equipped. Tighten the air vent screw, if equipped.
(3) Remove the engine top cowling and silencer cover.
(4) Install the outboard motor on the test tank.

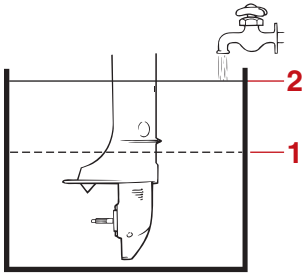

1. Lowest water level
2. Water surface

(5) Fill the tank with fresh water to above the level of the anti-cavitation plate. ***NOTICE:* If the fresh water level is below the level of the anti-cavitation plate, or if the water supply is insufficient, engine seizure may occur.** [ECM00292]
(6) Cooling system flushing is essential to prevent the cooling system from clogging up with salt, sand, or dirt. In addition, fogging/lubricating of the engine is mandatory to prevent excessive engine damage due to rust. Perform the flushing and fogging at the same time. **WARNING! Do not touch or remove electrical parts when starting or during operation. Keep hands, hair, and clothes away from the flywheel and other rotating parts while the engine is running.** [EWM00092]
(7) Run the engine at a fast idle for a few minutes in neutral position.
(8) Just prior to turning off the engine, quickly spray “Fogging Oil” alternately into each carburetor or the fogging hole of the silencer cover, if equipped. When properly done, the engine will smoke excessively and almost stall.

(9) If “Fogging Oil” is not available, run the engine at a fast idle until the fuel system empties and the engine stops.
(10) Remove the outboard motor from the test tank.
(11) Install the silencer cover or fogging hole cap, and the top cowling.
(12) Drain the cooling water completely out of the motor. Clean the body thoroughly.
(13) If “Fogging Oil” is not available, remove the spark plug(s). Pour a teaspoonful of clean engine oil into each cylinder. Crank several times manually. Replace the spark plug(s).
(14) Drain the fuel from both the built-in and portable fuel tanks, on equipped models.

TIP:
Portable fuel tank equipped models: Store the portable fuel tank in a dry, well-ventilated place, not in direct sunlight.

EMU41072
Lubrication
(1) Change the gear oil. For instructions, see page 52. Check the gear oil for the presence of water that indicates a leaky seal. Seal replacement should be performed by an authorized Yamaha dealer prior to use.
(2) Lubricate all grease fittings. For further details, see page 48.

TIP:
For long-term storage, fogging the engine with fogging oil is recommended. Contact your Yamaha dealer for information about fogging oil and procedures for your outboard motor.

EMU44342
Cleaning the outboard motor
When cleaning the outboard motor, the top cowling must be installed.

(1) Wash the exterior of the outboard motor using fresh water. ***NOTICE:*** **Do not spray water into the air intake.** [ECM01841]

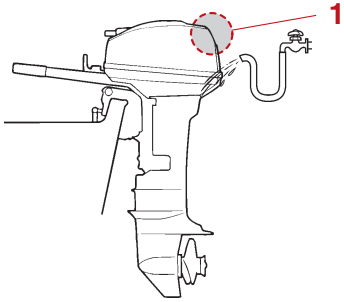

1. Air intake

(2) Drain the cooling water completely out of the outboard motor. Clean the body thoroughly.

EMU28463
Checking painted surface of outboard motor
Check the outboard motor for scratches, nicks, or flaking paint. Areas with damaged paint are more likely to corrode. If necessary, clean and paint the areas. Touch-up paint is available from your Yamaha dealer.

EMU37077
Periodic maintenance

EWM01982
WARNING

These procedures require mechanical skills, tools, and supplies. If you do not have the proper skills, tools, or supplies to perform a maintenance procedure, have a Yamaha dealer or other qualified mechanic do the work.
The procedures involve disassembling the motor and exposing dangerous parts. To reduce the risk of injury from moving, hot, or electrical parts:

- **Turn off the engine and keep engine shut-off cord (lanyard) with you when you perform maintenance unless otherwise specified.**
- **Allow the engine to cool before handling hot parts or fluids.**
- **Always completely reassemble the motor before operation.**

EMU28512
Replacement parts
If replacement parts are necessary, use only genuine Yamaha parts or parts of equivalent design and quality. Any part of inferior quality may malfunction, and the resulting loss of control could endanger the operator and passengers. Yamaha genuine parts and accessories are available from your Yamaha dealer.

EMU34152
Severe operating conditions
Severe operating conditions involve one or more of the following types of operation on a regular basis:
- Operating continuously at or near maximum engine speed (rpm) for many hours
- Operating continuously at a low engine speed (rpm) for many hours
- Operating without sufficient time for engine to warm up and cool down
- Frequent quick acceleration and deceleration
- Frequent shifting
- Frequently starting and stopping the engine(s)
- Operation that fluctuates often between light and heavy cargo loads

Outboard motors operating under any of these above conditions require more frequent maintenance. Yamaha recommends that you do this service twice as often as specified in the maintenance chart. For example, if a particular service should be done at 50 hours, do it instead at 25 hours. This will help prevent more rapid deterioration of engine components.

EMU34449

Maintenance chart 1

TIP:

- Refer to the sections in this chapter for explanations of each owner-specific action.
- The maintenance cycle on these charts assume usage of 100 hours per year and regular flushing of the cooling water passages. Maintenance frequency should be adjusted when operating the engine under adverse conditions such as extended trolling.
- Disassembly or repairs may be necessary depending on the outcome of maintenance checks.
- Expendable or consumable parts and lubricants will lose their effectiveness over time and through normal usage regardless of the warranty period.
- When operating in salt water, muddy, other turbid (cloudy), acidic water, the engine should be flushed with clean water after each use.

The "●" symbol indicates the check-ups which you may carry out yourself.
The "○" symbol indicates work to be carried out by your Yamaha dealer.

Item	Actions	Initial	Every		
		20 hours (3 months)	100 hours (1 year)	300 hours (3 years)	500 hours (5 years)
Anode(s) (external)	Inspection or replacement as necessary		●/○		
Cooling water leakage	Inspection or replacement as necessary	○	○		
Cowling lock lever	Inspection		●/○		
Engine starting condition/noise	Inspection	●/○	●/○		
Engine idle speed/noise	Inspection	●/○	●/○		
Fuel filter (disposal type)	Replacement		○		
Fuel filter (inside built-in fuel tank)	Inspection and cleaning as necessary		○		
Fuel line	Inspection	●	●		
Fuel line	Inspection or replacement as necessary	○	○		
Fuel pump	Inspection or replacement as necessary			○	
Fuel/engine oil leakage	Inspection	○	○		
Gear oil	Replacement	●/○	●/○		
Greasing points	Greasing	●/○	●/○		
Impeller/water pump housing	Inspection or replacement as necessary		○		
Impeller/water pump housing	Replacement			○	

Item	Actions	Initial	Every		
		20 hours (3 months)	100 hours (1 year)	300 hours (3 years)	500 hours (5 years)
Propeller/propeller nut/cotter pin	Inspection or replacement as necessary	●/○	●/○		
Shift link/shift cable	Inspection, adjustment or replacement as necessary	○	○		
Spark plug(s)	Inspection or replacement as necessary		●/○		
Spark plug caps/spark plug wires	Inspection or replacement as necessary	○	○		
Water from the cooling water pilot hole	Inspection	●/○	●/○		
Throttle link/throttle cable/throttle pick-up timing	Inspection, adjustment or replacement as necessary	○	○		
Thermostat	Inspection or replacement as necessary		○		
Cooling water inlet	Inspection	●/○	●/○		
Main switch/stop switch/choke switch	Inspection or replacement as necessary	○	○		
Wire harness connections/wire coupler connections	Inspection or replacement as necessary	○	○		
Fuel tank (Yamaha portable tank)	Inspection and cleaning as necessary		○		
Fuel tank (built-in tank)	Inspection and cleaning as necessary		○		

EMU34452

Maintenance chart 2

Item	Actions	Every
		1000 hours
Exhaust guide/exhaust manifold	Inspection or replacement as necessary	○

EMU28945

Greasing

Yamaha grease A (water resistant grease)

Yamaha grease D (corrosion resistant grease; for propeller shaft)

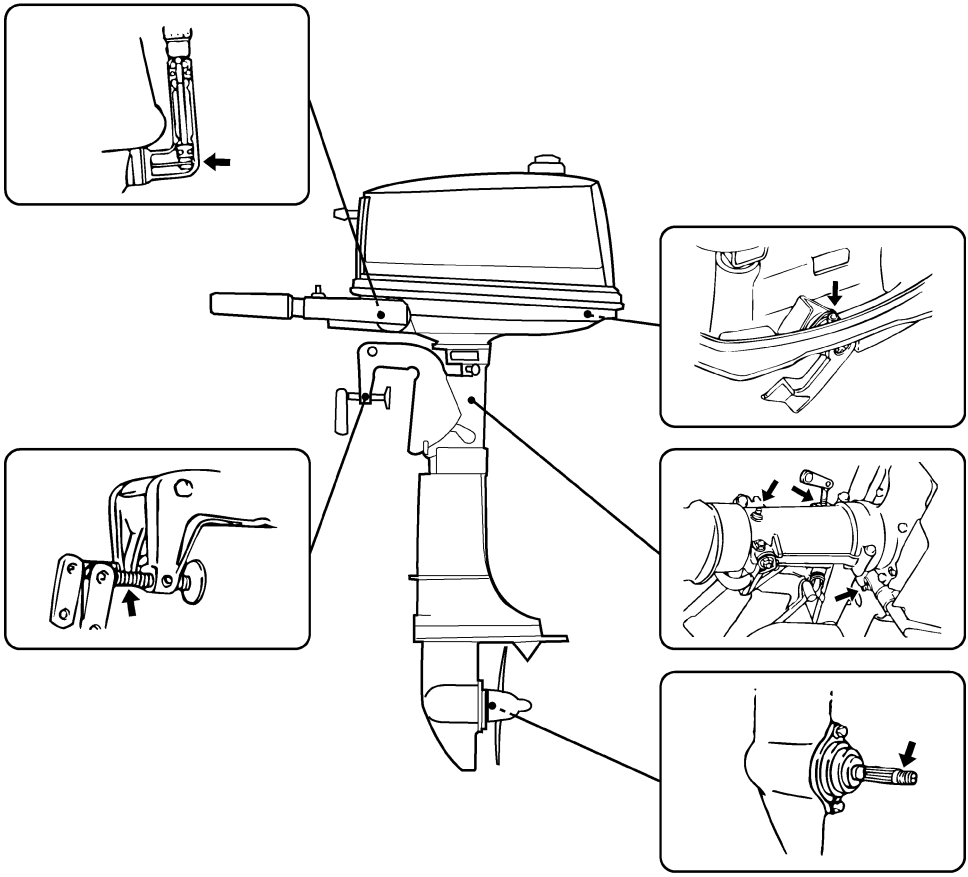

ZMU02797

EMU44493

Cleaning and adjusting spark plug

The spark plug is an important engine component and is easy to inspect. The condition of the spark plug can indicate something about the condition of the engine. For example, if the center electrode porcelain is very white, this could indicate an intake air leak or carburetion problem in that cylinder. Do not attempt to diagnose any problems yourself. Instead, take the outboard motor to a Yamaha dealer. You should periodically remove and inspect the spark plug because heat and deposits will cause the spark plug to slowly break down and erode.

(1) Remove the spark plug caps from the spark plugs.

(2) Remove the spark plug. If electrode erosion becomes excessive, or if carbon and other deposits are excessive, you should replace the spark plug with another of the correct type. **WARNING! When removing or installing a spark plug, be careful not to damage the insulator. A damaged insulator could allow external sparks, which could lead to explosion or fire.** [EWM00562]

Standard spark plug:
BR7HS

(3) Be sure to use the specified spark plug, otherwise the engine may not operate properly. Before fitting the spark plug, measure the electrode gap with a wire thickness gauge; replace it if out of specification.

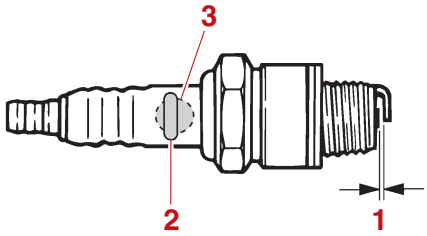

ZMU02179

1. Spark plug gap
2. Spark plug part number
3. Spark plug I.D. mark (NGK)

Spark plug gap:
0.6–0.7 mm (0.024–0.028 in)

(4) When fitting the plug, wipe off any dirt from the threads, and then screw it in to the correct torque.

Spark plug torque:
25 N·m (2.5 kgf·m, 18 lb·ft)

TIP:
If a torque-wrench is not available when you are reinstalling a spark plug, a good estimate of the correct torque is 1/12 turn past finger-tight. When you are installing a new spark plug, a good estimate of the correct torque is 1/2 to 2/3 turn past finger-tight.

EMU28992

Checking fuel filter

Check the fuel filter periodically. The fuel filter is a one piece, disposable type. If foreign matter is found in the filter, replace it. For replacement of the fuel filter, consult your Yamaha dealer.

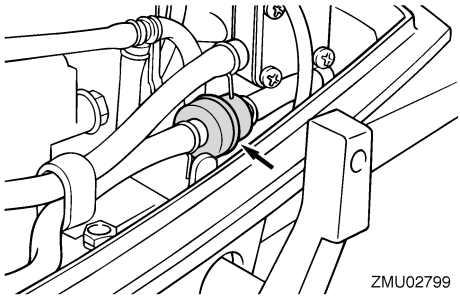

EMU29045
Inspecting idle speed

EWM00452

WARNING

- **Do not touch or remove electrical parts when starting or during operation.**
- **Keep hands, hair, and clothes away from the flywheel and other rotating parts while the engine is running.**

ECM00491

NOTICE

This procedure must be performed while the outboard motor is in the water. A flushing attachment or test tank can be used.

If the boat is not equipped with a tachometer for the outboard motor, use a diagnostic tachometer for this procedure. Results may vary depending on whether testing is conducted with the flushing attachment, in a test tank, or with the outboard motor in the water.

(1) Start the engine and allow it to warm up fully in neutral until it is running smoothly.
(2) Once the engine has warmed up, verify whether the idle speed is set to specification. For idle speed specifications, see page 10. If you have difficulty verifying the idle speed, or the idle speed requires adjustment, consult a Yamaha dealer or other qualified mechanic.

EMU29116
Inspecting wiring and connectors

- Inspect that each connector is engaged securely.
- Inspect that each ground lead is properly secured.

EMU39303
Checking propeller

EWM02281

WARNING

You could be seriously injured if the engine accidentally starts when you are near the propeller. Before inspecting, removing, or installing the propeller, place the gear shift lever in neutral, and remove the clip from the engine shut-off switch.

Do not use your hand to hold the propeller when loosening or tightening the propeller nut. Put a wood block between the anti-cavitation plate and the propeller to prevent the propeller from turning.

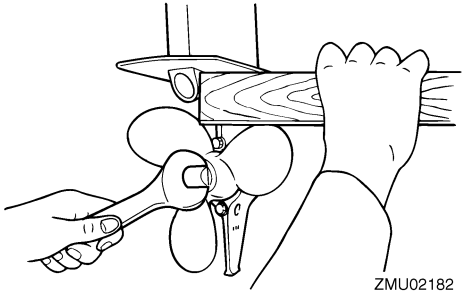

Checkpoints

- Check each of the propeller blades for erosion from cavitation or ventilation, or other damage.
- Check the propeller shaft for damage.
- Check the splines for wear or damage.
- Check for fish line tangled around the propeller shaft.

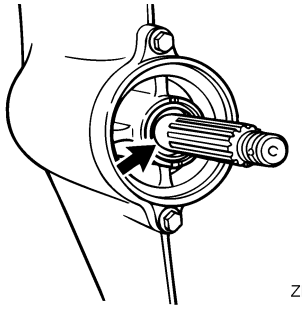

- Check the propeller shaft oil seal for damage.

EMU30663
Removing propeller
EMU29198
Spline models

(1) Straighten the cotter pin and pull it out using a pair of pliers.

(2) Remove the propeller nut, washer, and spacer (if equipped). **WARNING! Do not use your hand to hold the propeller when loosening the propeller nut.** [EWM01891]

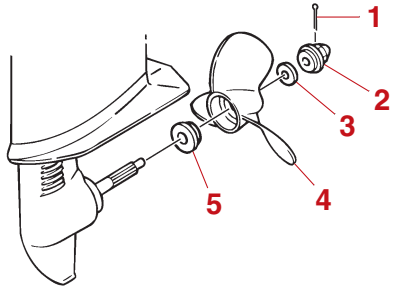

1. Cotter pin
2. Propeller nut
3. Washer
4. Propeller
5. Thrust washer

(3) Remove the propeller, washer (if equipped), and thrust washer.

EMU30673
Installing propeller
EMU30374
Spline models
ECM00502

NOTICE

Make sure to use a new cotter pin and bend the ends over securely. Otherwise, the propeller could come off during operation and be lost.

(1) Apply Yamaha marine grease or a corrosion resistant grease to the propeller shaft.

(2) Install the spacer (if equipped), thrust washer, and propeller on the propeller shaft. ***NOTICE:*** **Make sure to install the thrust washer before installing the propeller. Otherwise, the lower case and propeller boss could be damaged.** [ECM01882]

(3) Install the spacer (if equipped) and the washer. Tighten the propeller nut until there is no forward-and-backward movement.

(4) Align the propeller nut with the propeller shaft hole. Insert a new cotter pin in the hole and bend the cotter pin ends. ***NOTICE:*** **Do not reuse the cotter pin. Otherwise, the propeller can come off during operation.** [ECM01892]

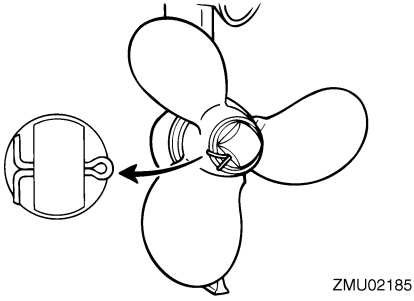

TIP:
If the propeller nut does not align with the propeller shaft hole after tightening it, loosen the nut until it aligns with the hole.

EMU47070
Changing gear oil
EWM00801

WARNING

- **Be sure the outboard motor is securely fastened to the transom or a stable stand. You could be severely injured if the outboard motor falls on you.**
- **Never get under the lower unit while it is tilted, even when the tilt support lever or knob is locked. Severe injury could occur if the outboard motor accidentally falls.**

(1) Tilt the outboard motor so that the gear oil drain screw is at the lowest point possible.
(2) Place a suitable container under the gear case.
(3) Remove the gear oil drain screw and gasket. ***NOTICE:*** **If there is an excessive quantity of metal particles on the magnetic gear oil drain screw, this can indicate lower unit problem. Consult your Yamaha dealer.** [ECM01901]

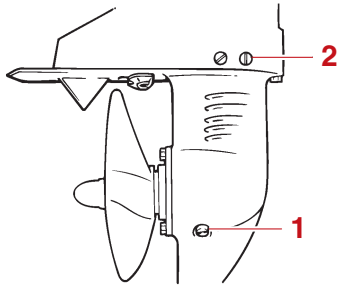

1. Gear oil drain screw
2. Oil level plug

TIP:
- If a magnetic gear oil drain screw is equipped, remove all metal particles from the screw before installing it.
- Always use new gaskets. Do not reuse the removed gaskets.

(4) Remove the oil level plug and gasket to allow the oil to drain completely. ***NOTICE:*** **Check the used gear oil after it has been drained. If the gear oil is milky or contains water or a large amount of metal particles, the gear case may be damaged. Have a Yamaha dealer check and repair the outboard motor.** [ECM00714]

TIP:
For disposal of used oil, consult your Yamaha dealer.

(5) Put the outboard motor in a vertical position. Using a flexible or pressurized filling device, inject the gear oil into the gear oil drain screw hole.

Recommended gear oil:
YAMALUBE outboard gear oil or Hypoid gear oil
Recommended gear oil grade:
SAE 90 API GL-4
Gear oil quantity:
0.100 L (0.106 US qt, 0.088 Imp.qt)

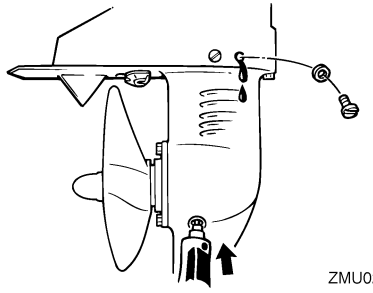

ZMU02755

(6) Put a new gasket on the oil level plug. When the oil begins to flow out of the oil level plug hole, insert and tighten the oil level plug.

TIP:
Apply a light coat of gear oil to the oil level plug thread and gasket before installation.

Tightening torque: 7 N·m (0.7 kgf·m, 5.2 lb·ft)

(7) Put a new gasket on the gear oil drain screw. Insert and tighten the gear oil drain screw.

TIP:
Apply a light coat of gear oil to the gear oil drain screw thread and gasket before installation.

Tightening torque: 7 N·m (0.7 kgf·m, 5.2 lb·ft)

EMU29318
Inspecting and replacing anode(s)

Yamaha outboard motors are protected from corrosion by sacrificial anodes. Inspect the external anodes periodically. Remove scales from the surfaces of the anodes. Consult a Yamaha dealer for replacement of external anodes.

ECM00721
NOTICE

Do not paint anodes, as this would render them ineffective.

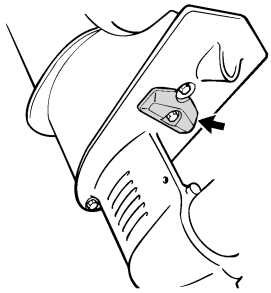
ZMU02803

TIP:
Inspect ground leads attached to external anodes on equipped models. Consult a Yamaha dealer for inspection and replacement of internal anodes attached to the power unit.

EMU29428

Troubleshooting

A problem in the fuel, compression, or ignition systems can cause poor starting, loss of power, or other problems. This section describes basic checks and possible remedies, and covers all Yamaha outboard motors. Therefore some items may not apply to your model.
If your outboard motor requires repair, bring it to your Yamaha dealer.
If the engine trouble-alert indicator is flashing, consult your Yamaha dealer.

Starter will not operate.
Q. Is battery capacity weak or low?
A. Check battery condition. Use battery of recommended capacity.

Q. Are battery connections loose or corroded?
A. Tighten battery cables and clean battery terminals.

Q. Is fuse for electric start relay or electric circuit blown?
A. Check for cause of electric overload and repair. Replace fuse with one of correct amperage.

Q. Are starter components faulty?
A. Have serviced by a Yamaha dealer.

Q. Is shift lever in gear?
A. Shift to neutral.

Engine will not start (starter operates).
Q. Is fuel tank empty?
A. Fill tank with clean, fresh fuel.

Q. Is fuel contaminated or stale?
A. Fill tank with clean, fresh fuel.

Q. Is fuel filter clogged?
A. Clean or replace filter.

Q. Is starting procedure incorrect?
A. See page 31.

Q. Has fuel pump malfunctioned?
A. Have serviced by a Yamaha dealer.

Q. Are spark plug(s) fouled or of incorrect type?
A. Inspect spark plug(s). Clean or replace with recommended type.

Q. Are spark plug cap(s) fitted incorrectly?
A. Check and re-fit cap(s).

Q. Is ignition wiring damaged or poorly connected?
A. Check wires for wear or breaks. Tighten all loose connections. Replace worn or broken wires.

Q. Are ignition parts faulty?
A. Have serviced by a Yamaha dealer.

Q. Is engine shut-off cord (lanyard) not attached?
A. Attach cord.

Q. Are engine inner parts damaged?
A. Have serviced by a Yamaha dealer.

Engine idles irregularly or stalls.
Q. Are spark plug(s) fouled or of incorrect type?
A. Inspect spark plug(s). Clean or replace with recommended type.

Q. Is fuel system obstructed?
A. Check for pinched or kinked fuel line or other obstructions in fuel system.

Q. Is fuel contaminated or stale?
A. Fill tank with clean, fresh fuel.

Q. Is fuel filter clogged?
A. Clean or replace filter.

Q. Have ignition parts failed?
A. Have serviced by a Yamaha dealer.

Q. Has alert system activated?
A. Find and correct cause of alert.

Q. Is spark plug gap incorrect?
A. Inspect and adjust as specified.

Q. Is ignition wiring damaged or poorly connected?
A. Check wires for wear or breaks. Tighten all loose connections. Replace worn or broken wires.

Q. Is specified engine oil not being used?
A. Check and replace oil as specified.

Q. Is thermostat faulty or clogged?
A. Have serviced by a Yamaha dealer.

Q. Are carburetor adjustments incorrect?
A. Have serviced by a Yamaha dealer.

Q. Is fuel pump damaged?
A. Have serviced by a Yamaha dealer.

Q. Is air vent screw on fuel tank closed?
A. Open air vent screw.

Q. Is choke knob pulled out?
A. Return to home position.

Q. Is motor angle too high?
A. Return to normal operating position.

Q. Is carburetor clogged?
A. Have serviced by a Yamaha dealer.

Q. Is fuel joint connection incorrect?
A. Connect correctly.

Q. Is throttle valve adjustment incorrect?
A. Have serviced by a Yamaha dealer.

Q. Is battery cable disconnected?
A. Connect securely.

Alert buzzer sounds or indicator lights.
Q. Is cooling system clogged?
A. Check water intake for restriction.

Q. Is engine oil level low?
A. Fill oil tank with specified engine oil.

Q. Is heat range of spark plug incorrect?
A. Inspect spark plug and replace it with recommended type.

Q. Is specified engine oil not being used?
A. Check and replace oil with specified type.

Q. Is engine oil contaminated or deteriorated?
A. Replace oil with fresh, specified type.

Q. Is oil filter clogged?
A. Have serviced by a Yamaha dealer.

Q. Has oil feed/injection pump malfunctioned?

A. Have serviced by a Yamaha dealer.

Q. Is load on boat improperly distributed?
A. Distribute load to place boat on an even plane.

Q. Is water pump or thermostat faulty?
A. Have serviced by a Yamaha dealer.

Q. Is there excess water in fuel filter cup?
A. Drain filter cup.

Engine power loss.
Q. Is propeller damaged?
A. Have propeller repaired or replaced.

Q. Is propeller pitch or diameter incorrect?
A. Install correct propeller to operate outboard at its recommended speed (r/min) range.

Q. Is trim angle incorrect?
A. Adjust trim angle to achieve most efficient operation.

Q. Is motor mounted at incorrect height on transom?
A. Have motor adjusted to proper transom height.

Q. Has alert system activated?
A. Find and correct cause of alert.

Q. Is boat bottom fouled with marine growth?
A. Clean boat bottom.

Q. Are spark plug(s) fouled or of incorrect type?
A. Inspect spark plug(s). Clean or replace with recommended type.

Q. Are weeds or other foreign matter tangled on gear housing?
A. Remove foreign matter and clean lower unit.

Q. Is fuel system obstructed?
A. Check for pinched or kinked fuel line or other obstructions in fuel system.

Q. Is fuel filter clogged?
A. Clean or replace filter.

Q. Is fuel contaminated or stale?
A. Fill tank with clean, fresh fuel.

Q. Is spark plug gap incorrect?
A. Inspect and adjust as specified.

Q. Is ignition wiring damaged or poorly connected?
A. Check wires for wear or breaks. Tighten all loose connections. Replace worn or broken wires.

Q. Have electrical parts failed?
A. Have serviced by a Yamaha dealer.

Q. Is specified fuel not being used?
A. Replace fuel with specified type.

Q. Is specified engine oil not being used?
A. Check and replace oil with specified type.

Q. Is thermostat faulty or clogged?
A. Have serviced by a Yamaha dealer.

Q. Is air vent screw closed?
A. Open the air vent screw.

Q. Is fuel pump damaged?

A. Have serviced by a Yamaha dealer.

Q. Is fuel joint connection incorrect?
A. Connect correctly.

Q. Is heat range of spark plug incorrect?
A. Inspect spark plug and replace it with recommended type.

Q. Is high pressure fuel pump drive belt broken?
A. Have serviced by a Yamaha dealer.

Q. Is engine not responding properly to shift lever position?
A. Have serviced by a Yamaha dealer.

Engine vibrates excessively.
Q. Is propeller damaged?
A. Have propeller repaired or replaced.

Q. Is propeller shaft damaged?
A. Have serviced by a Yamaha dealer.

Q. Are weeds or other foreign matter tangled on propeller?
A. Remove and clean propeller.

Q. Is motor mounting bolt loose?
A. Tighten bolt.

Q. Is steering pivot loose or damaged?
A. Tighten or have serviced by a Yamaha dealer.

EMU29435

Temporary action in emergency

EMU29442

Impact damage

EWM00871

WARNING

The outboard motor can be seriously damaged by a collision while operating or trailering. Damage could make the outboard motor unsafe to operate.

If the outboard motor hits an object in the water, follow the procedure below.

(1) Stop the engine immediately.
(2) Check the control system and all components for damage. Also, check the boat for damage.
(3) Whether damage is found or not, return to the nearest harbor slowly and carefully.
(4) Have a Yamaha dealer check the outboard motor before operating it again.

EMU39792

Starter will not operate

If the starter mechanism does not operate (the engine cannot be cranked with the starter), the engine can be started with an emergency starter rope.

EWM02362

WARNING

- **Use this procedure only for emergency engine starting to return to the nearest port for repairs.**
- **When the emergency starter rope is used to start the engine, the start-in-gear protection device does not operate. Make sure that the shift lever is in the neutral position. Otherwise, the boat could unexpectedly start to move, which could result in an accident.**
- **Attach the engine shut-off cord to a secure place on your clothing, or your arm or leg while operating the boat.**
- **Do not attach the cord to clothing that could tear loose. Do not route the cord where it could become entangled, preventing it from functioning.**
- **Avoid accidentally pulling the cord during normal operation. Loss of engine power means the loss of most steering control. Also, without engine power, the boat could slow rapidly. This could cause people and objects in the boat to be thrown forward.**
- **Make sure that no one is standing behind you when pulling the starter rope. It could whip behind you and injure someone.**
- **An unguarded, rotating flywheel is very dangerous. Keep loose clothing and other objects away when starting the engine. Use the emergency starter rope only as instructed. Do not touch the flywheel or other moving parts when the engine is running. Do not install the starter mechanism or top cowling after the engine is running.**
- **Do not touch the ignition coil, spark plug wire, spark plug cap, or other electrical components when starting or operating the outboard motor. You could get an electrical shock.**

EMU29563

Emergency starting engine

(1) Remove the top cowling.

(2) Remove the start-in-gear protection cable from the starter, if equipped.

(3) Remove the starter/flywheel cover after removing the bolt(s).

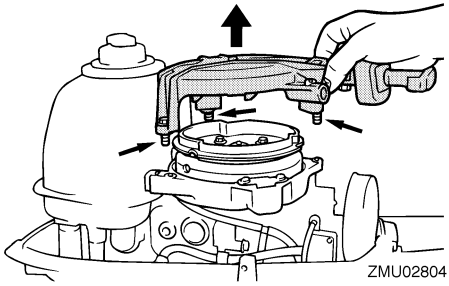

(4) Prepare the engine for starting. For further information, see page 31. Be sure the engine is in neutral and that the clip is attached to the engine shut-off switch. The main switch must be “ON” (on), if equipped.

(5) If equipped the choke knob, pull out it when the engine is cold. After the engine starts, gradually return the choke knob to its home position as the engine warms up.

(6) Insert the knotted end of the emergency starter rope into the notch in the flywheel rotor and wind the rope several turns around the flywheel clockwise.

(7) Give a strong pull straight out to crank and start the engine. Repeat if necessary.

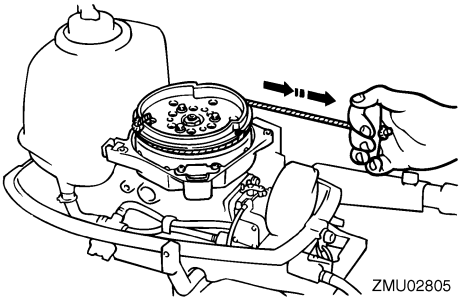

EMU33502

Treatment of submerged motor

If the outboard motor is submerged, immediately take it to a Yamaha dealer. Otherwise some corrosion may begin almost immediately. ***NOTICE:*** **Do not attempt to run the outboard motor until it has been completely inspected.** [ECM00402]

A

Alcohol and drugs 2
Anode(s), inspecting and replacing 53
Anti-fouling paint 14
Avoid collisions 3

B

Battery requirements 11
Boat horsepower rating 11
Boating safety 2
Boating safety publications 4
Breaking in engine 24

C

Carbon monoxide 2
CE Marking 5
Checks after engine warm up 34
Checks after starting engine 33
Checks before starting engine 24
Choke knob 19
Clamping the outboard motor 22
Cleaning the outboard motor 44
Collisions with floating or submerged objects 3
Components diagram 15
Control functions, checking 25
Cooling water 33
Cowling lock lever 20
Cruising in salt water or other conditions 40

E

EC Declaration of Conformity (DoC) 5
Electric shock 1
Emergency equipment 14
Emergency starting engine 58
Emergency, temporary action in 57
Engine, checking 25
Engine oil, checking 25
Engine oil requirements 12
Engine shut-off cord (lanyard) 1, 25
Engine shut-off cord (lanyard) and clip 18
Engine stop button 18

F

Filling fuel for built-in tank 27
Filling fuel for portable tank 26
First-time operation 24
Flushing in a water tank 43
Fuel and engine oil, filling 26
Fuel cock 16
Fuel filter, checking 49
Fuel leaks, checking for 25
Fuel level 25
Fuel requirements 13
Fuel system 25
Fuel tank 15, 16

G

Gasoline 1, 13
Gasoline and oil mixing 28
Gasoline exposure and spills 1
Gear oil, changing 52
Gear shift lever 17
Greasing 48

H

Hot parts 1

I

Identification numbers record 5
Idle speed, inspecting 50
Impact damage 57
Installation requirements 11

L

Laws and regulations 4
Lubrication 44

M

Maintenance chart 1 46
Maintenance chart 2 47
Manual starter handle 19
Modifications 2
Mounting height 21
Mounting outboard motor 11
Mounting the outboard motor 21
Muddy or acidic water 13

INDEX

O

Operating engine 30
Outboard motor disposal requirements 14
Outboard motor (painted surface), checking 44
Outboard motor safety 1
Outboard motor serial number 5
Overloading 2

P

Passenger training 4
Passengers 2
People in the water 2
Periodic maintenance 44
Personal flotation devices (PFDs) 2
Propeller 1
Propeller, checking 50
Propeller, installing 51
Propeller, removing 51
Propeller selection 11

R

Read manuals and labels 7
Replacement parts 45
Rotating parts 1

S

Sending fuel 31
Sending fuel (portable tank) 30
Severe operating conditions 45
Shallow water 39
Shifting 34
Shifting (checks after engine warm up) 34
Spark plug, cleaning and adjusting 49
Specifications 10
Starter will not operate 57
Starting engine 31
Start-in-gear protection 12
Steering friction adjuster 19
Stop switches 34
Stopping boat 35
Stopping engine 35
Storing outboard motor 43
Submerged outboard motor 59

T

Throttle friction adjuster 18
Throttle grip 17
Throttle indicator 17
Tiller handle 17
Tilt support bar 20
Tilting up and down 37
To use the battery 11
Top cowling, installing 26
Top cowling, removing 25
Transporting and storing outboard motor 42
Trim rod (tilt pin) 19
Trimming outboard motor 36
Troubleshooting 54

W

Warming up engine 33
Warning labels 7
Weather 3
Wiring and connectors, inspecting 50

Y

Yamalube 12

Printed in Japan
December 2019–0.1 × 1 CR